A C WHARTON, JR
MAYOR

TED FOX
DIRECTOR OF
PUBLIC WORKS

CLARENCE CASH, JR.
FIRE CHIEF

WILLIAM HINER
DEPUTY FIRE CHIEF

SHELBY COUNTY FIRE DEPARTMENT

1075 Mullins Station Road, Building C, 2nd Floor
Memphis, Tennessee 38134
Telephone: (901) 379-7072 Fax: (901) 373-4925
www.scfdtn.com

Proceed
8/19/08

Date: August 15, 2008

To: Nelson Fowler, Finance Department

From: Clarence Cash, Jr, Fire Chief

Re: Purchase Information for New Fire Pumper

Attached you will find the information pertaining to the purchase of a New Custom Pumper from Ferrara Fire Apparatus, Inc.

The enclosed information documents provide confirmation of the manufacturer as being on the GSA Federal Contract for Fire Apparatus Purchases, the final apparatus purchase price, the manufacturer Tax ID number, the contact person for the manufacturer and detailed specifications on the apparatus.

Below, I have listed the details of this purchase request, along with additional contact information for Ferrara Fire Apparatus, Inc:

Manufacturer:	Ferrara Fire Apparatus, Inc
Vehicle:	2008 Ferrara Custom Pumper, Igniter Series
Cost:	$281,030.00 per unit
GSA Contract:	GS-30F-0001N
DUNS #:	958119026
Tax ID:	72-1129363
Delivery Timeframe:	75 Days
Contact Persons:	Robin Hurst, Regional Manager; 1-800-443-9006 - Primary Contact Eric Adams, Apparatus Division; 1-800-443-9006 - Secondary Contact

Last month, President Bush signed the Local Preparedness Acquisitions Act. It authorizes the General Services Administration (GSA) to extend to Emergency Services Sector (ESS) organizations and their state and local governments the opportunity to fully participate in the agency's cooperative purchasing program to buy homeland security equipment at discounted rates. Taking advantage of reduced prices, especially in the current economic climate, helps emergency departments and agencies conserve their resources for critical infrastructure protection (CIP) and response acquisitions. Responder organizations will be able to procure discounted law enforcement and firefighting equipment, in addition to homeland security equipment such as alarm systems and facility management systems.

RECEIVED
08 AUG 15 PM 2:44
PURCHASING DEPT.

Thank you,

Clarence Cash, Jr, Fire Chief
Shelby County Fire Department

FERRARA

FERRARA FIRE APPARATUS, INCORPORATED

Leading the Way!

FIRE APPARATUS PROPOSAL

August 14, 2008

Shelby County Fire Department
1075 Mullins Station
Building C, 2nd Floor
Memphis, Tennessee 38134

Supply one (1) or more Ferrara Fire Apparatus, Inc. G-IGN-P750 Custom Pumper per the attached set of specifications for the total sum of Two Hundred Eighty-One Thousand Thirty Dollars and Zero Cents ($281,030.00) per unit.

Vendor:
Ferrara Fire Apparatus, Inc.
27855 James Chapel Road
Holden, LA 70744

GSA Contract #: GS-30F-0001F

DUNS#: 958119026

Tax ID#: 72-1129363

Delivery Time: 75 Calendar Days after receipt of a Purchase Order

FOB Points: 48 Contiguous States and Washington DC or seaport within the 48 Contiguous States and Washington DC

Sincerely,
Ferrara Fire Apparatus, Inc.

E. Adams

Eric Adams
Apparatus Division

27855 James Chapel Road • P.O. Box 249 • Holden, LA 70744
www.ferrarafire.com • www.fireequipment.com •E-mail: erica@ferrarafire.com
Phone 225-567-7100 • 800-443-9006 • Fax 225-567-7679

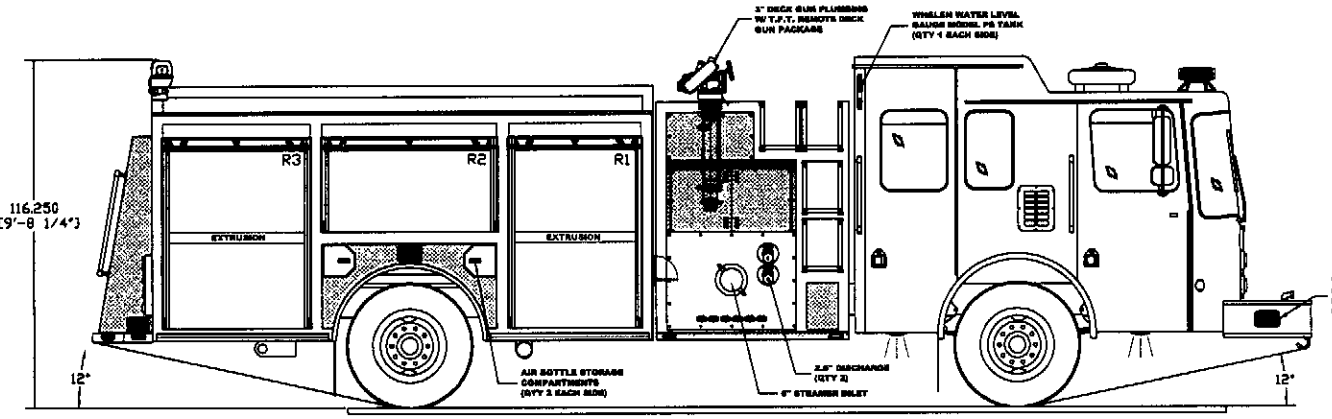

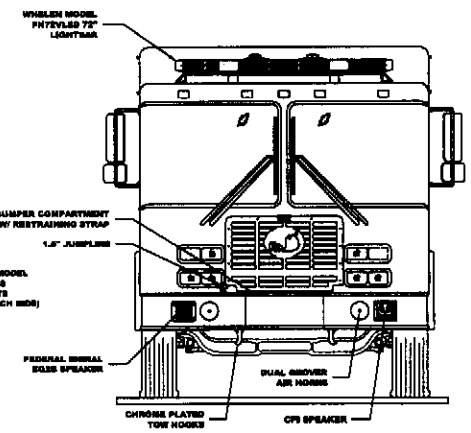

COMPARTMENT DIMENSIONS		
COMPT.	OPENING	INTERIOR
L1/R1	41W X 59H	44W X 72H X 15D UPPER 18D LOWER
L2/R2	55W X 27H	58W X 40H X 15D
L3/R3	46W X 59H	49W X 72H X 15D UPPER TRANS. COVER
B1	43W X 50.50H	46W X 59.50H X 15D UPPER 30D LOWER

IT IS UNLAWFUL TO COPY OR REPRODUCE ANY OR ALL OF THIS DRAWING WITHOUT THE WRITTEN PERMISSION OF FERRARA FIRE APPARATUS. ANY UNAUTHORIZED REPRODUCTION WILL RESULT IN PROSECUTION TO THE FULLEST EXTENT OF THE LAW. DIMENSIONS AND ITEM LOCATIONS ARE APPROXIMATE AND ARE SUBJECT TO DEVIATIONS THAT MAY OCCUR OR BE NECESSARY DURING CONSTRUCTION. SOME DETAILS MAY NOT BE SHOWN.

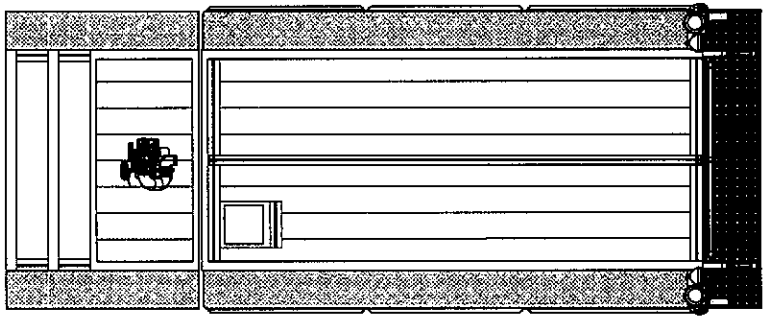

FERRARA

FERRARA FIRE APPARATUS, INCORPORATED

SHELBY COUNTY FD

1500 GPM MIDSHIP PUMP

750 GALLON WATER TANK

HOSEBED CAPACITY
1200' OF 5"
600' OF 2.5"

LADDER STORAGE COMPLIMENT
1-24' 2-SECTION LADDER
1-14' ROOF LADDER
1-10' ATTIC LADDER
2-PIKE POLE TUBES

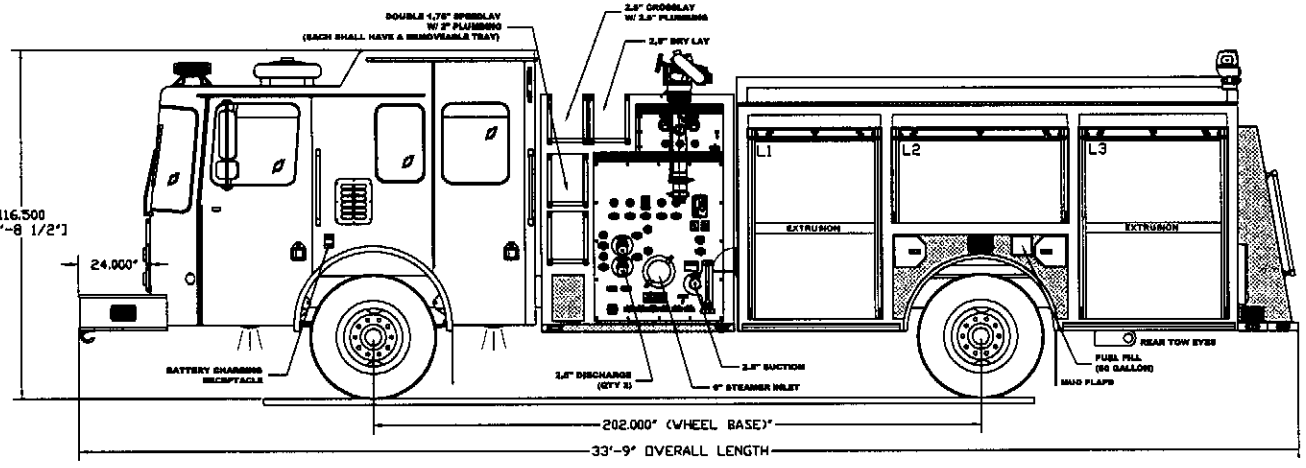

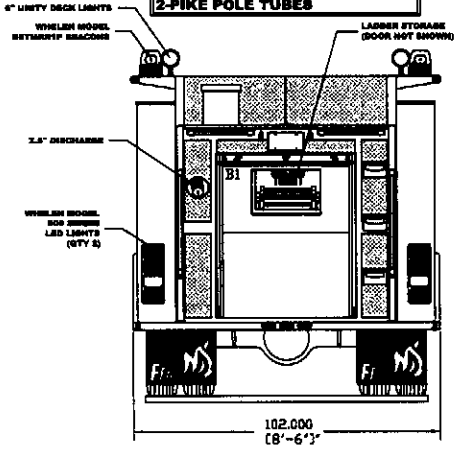

8/6/2008 11:19:09 AM, ChetA

Shelby County Fire Department
Custom Pumper Specifications

Revised 8.13.08

PRE-CONSTRUCTION CONFERENCE - FACTORY

A pre-construction conference will be held at the factory prior to the actual construction of the vehicle(s). The conference will be held in the successful bidders manufacturing facility with three (3) representatives of the Fire Department and appropriate representatives of the successful bidder. Transportation, lodging and meals, will be the responsibility of the successful bidder.

FINAL INSPECTION TRIP

There will be a final inspection trip for three (3) representatives of the buying authority at the facility where the apparatus is being constructed. The inspection trip(s) will be completed prior to delivery of the apparatus. Factory and Sales representatives will be available at the time of inspection. Transportation, lodging and meals, will be the responsibility of the successful bidder.

TRANSPORTATION

To insure proper break-in of all components while still under warranty, the apparatus will be delivered over the road under its own power. (Rail and/or truck freight will not be acceptable)

INSTRUCTION

There will be One (1) day(s) of instruction provided by a factory authorized representative. This representative will provide instruction to the department on the operation, maintenance and care of the apparatus delivered, as well as any equipment supplied with the apparatus.

APPROVAL DRAWING

Prior to construction, the successful bidder will provide three approval drawings of the apparatus for the fire department's review. The drawings will show such items as the chassis being utilized, lights, horns, sirens, pump panels, and all compartment locations and dimensions. The blueprint will be a visual interpretation of the unit as it is to be constructed. The buying authority will sign all drawings. One print will be retained by the Fire Department, the dealer will retain one print, and one print, will be returned to the manufacturer.

CHASSIS FRAME

The frame shall be designed to industry standards. The manufacturer shall provide a life time frame warranty to the original purchaser of the chassis. The frame rails shall be 10.5" x 3.5" x .375" heat treated steel.

The rails shall be 110,000 psi minimum yield and shall have a minimum section modulus of 18.34 cu. in. calculated by using the square corner shape method. The resulting frame rail resistance to bending moment shall be 2,017,400 in. lb. per rail. The crossmembers shall be bolted in place using grade 8 bolts, hardened washers, and grade C distorted thread locknuts. Flanged head fasteners and nylon locking nuts are not acceptable. The top of the frame rails shall be free of bolt heads.

Frame engine cutouts shall be made with a plasma torch to minimize the heat affected zone of the cut. All cutouts shall have a minimum of 6 inch transitions between rail flange cut depths to reduce the stress concentrations throughout the cutout area. The root of all transition areas shall have a minimum of a 2 inch radius to reduce stress concentrations at the root.

FRONT BUMPER

A 12" high heavy-duty 10 gauge, polished stainless steel, wrap around, 2-rib front bumper shall be provided the full width of the cab.

BUMPER EXTENSION

The front frame extension shall be bolted directly to the main rail. The extension and main rail joint shall have a 3/8" thick side plate for reinforcement.

The front bumper face shall extend 24 inches ahead of the front face of the cab skin.

TOW HOOKS

Two (2) chromed tow hooks shall be provided and shall be attached directly to the front frame extension under the bumper. These tow hooks shall be attached with two Grade 8 bolts with hardened washers and Grade "C" distorted thread locknuts.

FRONT AXLE

The front axle shall be a MERITOR/ROCKWELL model "FL-941c" with a 18,740 lb. capacity.

The front axle shall be equipped with oil bath type oil seals. The spindles shall be equipped with transparent covers for oil level inspection.

Front springs shall be a minimum of ten (10) leaf elliptical type, 53" x 3-1/2" x .499" forged steel. Capacity at ground of 18,740 lbs. The spring rate shall not exceed 3,000 lbs/in deflection. The front springs shall have a military wrapper for safe operation.

All front spring pins shall have grease fittings for lubrication.

Double acting hydraulic shock absorbers are to be installed. These shocks shall have an effective piston diameter of 1.48"

The entire front suspension shall be designed for heavy duty custom fire apparatus.

The steering shall be equipped with a single SHEPPARD M110 integral power steering gear.

FRONT AXLE BRAKES

The front brakes shall be Cam-Master Q Plus, 16-1/2" X 6" (419 x 152), S-Cam, air operated heavy duty brakes for increased stopping power and brake life in servere braking applications.

The "S" cam brakes shall incorporate a double anchor pin design, for stability and smooth consistent stopping. The camshafts shall be heat treated with rolled spline construction.

The front axle shall be equipped with automatic slack adjusters (ASA) to provide optimum brake performance.

CRAMP ANGLE

The chassis shall have a turning cramp angle of 45 degrees. Both left and right turns have a full 45 degree cramp angle with tires and wheels mounted on the axle and installed in the chassis. The 45 degree cramp angle is achieved irrespective of options such as front suctions and disc brakes.

MERITOR/ROCKWELL STANDARD AXLE WARRANTY

The Meritor/Rockwell axle shall have a standard five (5) year unlimited mileage parts and labor warranty. Meritor shall provide a one (1) year parts and labor warranty for wheel seals. The seal warranty shall apply to standard Meritor wheel seals and not to other specified seals. Customer specified seals shall have a parts only warranty.

REAR AXLE

The rear axle shall be a MERITOR/ROCKWELL model "RS-24-160" with a 24,000# capacity for the fire service.

The rear axle shall be equipped with oil bath type wheel end seals.

VEHICLE TOP SPEED

The rear axle shall be geared for a top speed of 68 to 70 mph at engine governed RPM.

SINGLE AXLE REAR SUSPENSION

The rear springs shall be a minimum of seventeen (17) main including four (4) auxiliary leaves. The rear suspension shall have a rating of 27,000 lbs. Capacity. The rear suspension shall be a "self-leveling" slipper type with a main torque leaf that contains a military wrapper. The torque leaf shall contain a bronze bushing for long service life.

The rear hangers are to be of the slipper design. The rear suspension deflection rate shall not exceed 3,790 lbs. per inch.

One (1) inch diameter rear suspension U-bolts are required.

Two (2) channel type crossmembers shall be mounted in the rear suspension area, bolted to the frame rail to form a rear suspension support member.

REAR AXLE BRAKES

The rear brakes shall be Cam-Master, 16-1/2" X 7" (419 x 178), S-Cam, air operated heavy duty brakes for increased stopping power and brake life in servere braking applications.

The "S" cam brakes shall incorporate a double anchor pin design, for stability and smooth consistent stopping. The camshafts shall be heat treated with rolled spline construction.

The rear axle shall be equipped with automatic slack adjusters (ASA) to provide optimum brake performance.

MERITOR/ROCKWELL STANDARD AXLE WARRANTY

The Meritor/Rockwell axle shall have a standard five (5) year unlimited mileage parts and labor warranty. Meritor shall provide a one (1) year parts and labor warranty for wheel seals. The seal warranty shall apply to standard Meritor wheel seals and not to other specified seals. Customer specified seals shall have a parts only warranty.

LASER ALIGNMENT

The chassis shall have a laser alignment performed at the factory before delivery.

The manufacturer utilizes the newest generation of laser-assisted products. This system provides an accurate measuring system for wheels, axles and frames. The system is based on a laser technique using the vehicle's center line as a reference point. A play detector is used to ensure that all bushings and bearings are free from excess play. This system allows for exact and reliable system to measure and adjust wheel toe-in and camber, as well as measuring distorted and deformed axles.

Tow In Front Axle - The tow in on a vehicle is set to reduce tire wear and to insure that the vehicle shall steer in a straight line. Tow in measurements are set to a positive 2.5 millimeters total, giving the vehicle 1.25 millimeters from side to side.

Tow In Rear Axle - The tow in on the rear wheels is set up slightly different in that the axle and wheels are set to ride the "crown" of the road. This is achieved by adjusting the tow to a measurement of no less than 1 millimeter, but no more that 2 millimeters. The ideal measurement is 1.5 millimeters total for both sides.

Cramp Angle - Cramp angle is set to achieve the greatest turning radius possible with the selected components of the vehicle. Each front wheel is set to zero degrees. The wheel is then turned until it reaches the steering stops. This measurement is the cramp angle.

AIR SYSTEM

An air brake system meeting the requirements of the FMVSS - 121 shall be provided. The system shall consist of three (3) reservoirs with a 4,362 cu. in. volume. The air system shall consist of the following components:

Dual air system with a dual needle gauge, warning light and buzzer. A spring actuated parking brake built into the rear axle brakes with a manual control and warning light the in cab. These shall automatically apply in case of air system failure. A mechanical means of releasing the spring brake shall be provided in the event of total loss of air pressure.

A quick build up system shall be provided, capable of building enough air pressure to release the spring brake in less than thirty (30) seconds, when starting with the entire air system at zero pounds pressure.

The brake system shall be a split system. One (1) system serving the rear brakes and one (1) system serving the front brakes. The two (2) systems shall be connected with a double check valve that shall automatically shuttle air from the front system to the rear system should loss of air pressure occur. This system shall also modulate the amount of air so the spring brakes shall apply in direct relationship to the amount of pressure applied to the treadle valve.

The spring brakes shall be piped in such a manner that if the treadle valve is depressed while the spring brakes are applied, the spring brakes shall release and remain released as long as the treadle valve is depressed. They shall reapply immediately when the treadle valve is released.

The piping in the air system shall be 2-ply nylon reinforced color coded tubing for all stationary lines.

AIR DRYER

The air system shall include a MERITOR/ROCKWELL / WABCO System Saver 1200 air dryer. The dryer shall have a capacity of 30 CFM of air flow.

The air dryer shall have a spin on dessicant cartridge for ease in servicing the dryer dessicant.

The air dryer shall incorporate an integral turbo cut-off valve. The turbo cut-off valve shall close the path between the air compressor and the air dryer purge valve during the compressor "unload" cycle. This shall allow the air dryer to purge the water and contaminates without any loss of turbo boost or engine horsepower.

A 12 volt, 100 watt heated moisture ejector shall be an integral part of the air dryer. This heater shall be thermostatically controlled. The electrical connection for the heater shall use a sealed electrical connector to protect against moisture and corrosion.

MANUAL AIR TANK DRAINS

All air reservoirs shall have manual drain valves with rubber seats to reduce air valve leaks.

MERITOR/ROCKWELL/WABCO ABS BRAKE SYSTEM

A four channel, single rear axle model, MERITOR/ROCKWELL/WABCO ABS Braking System shall be supplied.

A frame mounted electronic control unit (ECU) shall monitor and control wheel speed during braking. Wheel sensors, contstantly monitoring wheel speed, send information to the ECU. If a wheel begins to lock the ECU transmits an electrical impluse to modulator valves that can apply, release or hold the air pressure in the brake chambers. The rapid modulation of air pressure prevents wheel lock-up and increases driver control.

This ABS system shall be a 4S/4M system with four (4) wheel speed sensors and four (4) modulator valves.

If a fault occurs in one wheel, that wheel shall have normal (non-ABS) brake function. The other wheels shall continue to provide the ABS function. If the ABS system should fail completely, the brake control shall be returned to normal (non-ABS) braking.

An ABS warning light shall be installed on the driver's dash message center. This warning light shall cycle through a test stage at the point of ignition turn on and remain illuminated until the vehicle reaches approximately four (4) MPH. The light shall illuminate in other conditions to warn of an ABS system failure and shall lluminate when the diagnostic function is activated.

FRONT TIRES

The front tires shall be 315/80R22.5-20PR (L) GOODYEAR G-291 all weather tread, tubeless radial tires. These tires shall be mounted on 22.5" x 9.00" rims.

Front axle GAWR shall be 18,000 lbs. @ 120 psi. **Maximum top speed 65 MPH.**

REAR TIRES

The rear tires shall be 12R22.5-16PR (H) GOODYEAR UNISTEEL G164 RTD traction tread, tubeless radial tires. These tires shall be mounted on 22.5" x 8.25" rims.

Single rear axle GAWR using these tires shall be 24,000 lbs. @ 110 psi.

FRONT ALUMINUM RIMS

Polished aluminum wheels shall be supplied on the front axle.

REAR ALUMINUM RIMS

Polished aluminum wheels shall be supplied on the rear axle.

ENGINE COOLANT RADIATOR

The engine coolant radiator shall have sufficient capacity to perform under the engine manufacturer installation requirements. The chassis manufacturer shall demonstrate the ability to meet this requirement with the submittal of an approved EPQ to the fire department for the apparatus.

The engine coolant radiator shall have a minimum core area of 989 square inches.

This radiator shall have drawn steel top and bottom tanks. These tanks shall have a material thickness of 16 gauge.
The tanks shall be bolted to the radiator header assemblies.

The header plates shall be made of 16 gauge brass.

The radiator tubes shall be constructed of .0068 inch thick brass and have a dimensional size of .076 inch x .625 inch. These radiator tubes shall have welded tube seams.

The radiator shall contain four (4) rows of tubes arranged in an inline profile across the radiator core. The entire radiator shall a contain (184) tubes. These tubes shall have a smooth bore to allow for radiator cleaning.

In the critically stressed area, where the radiator tubes are attached to the header plates, this joint shall be accomplished with a welding process on the coolant side. In addition to the welded joint a solder fillet joint shall occur on the air side of the core creating a continuous dual bond.

The radiator shall have a louvered serpentine type core that contains fins constructed of .003 inch thick copper. These fins shall be spaced to a maximum density of 14 fins per inch of radiator tube. Each fin shall have a louvered surface for high cooling efficiency.

The radiator shall contain an integral coolant de-aeration tank. This tank shall be designed to remove entrapped air or gas from the coolant side of the radiator.

The bottom tank of the radiator shall have a drain valve for coolant removal.

The coolant system shall contain an ethylene glycol and water mixture to keep the coolant from freezing to a temperature of -34 degrees F.

The bottom tank of the radiator shall have a transmission cooler with a plate-type design. The plates shall have internal turbulators to break up laminar oil flow across the surface. The cooler shall have 1175 square inches of surface area for water surface contact and heat transfer.

All radiator hoses shall be attached to the cooling system with stainless steel worm drive clamps.

The radiator system shall be a pressurized with a cap rated per the cooling system requirements of the specific engine manufacturer.

The high efficiency engine fan shall be encompassed with a radiator shroud to provide the proper air flow from the fan blade to the radiator.

The radiator shall have recirculation baffles to eliminate the possibility of recirculation of "hot" air to the face of the radiator core. The bottom of the radiator shall have a recirculation baffle from the radiator to the frame rails.

CHARGE AIR COOLER RADIATOR

The engine charge-air cooler shall have sufficient capacity to perform under the engine manufacturers installation requirements. The chassis manufacturer shall demonstrate the ability to meet this requirement with the submittal of an approved EPQ to the fire department for the apparatus.

This radiator shall have cast aluminum side tanks. These tanks shall have a material thickness of .200. These tanks shall be attached to the charge-air core with the ALBRAZE construction technique.

The external air fins shall be louvered serpentine and constructed of .006 inch thick aluminum.

The internal air fins shall be of the lance-and-offset design for greater air turbulence and higher efficiency. The internal fins are to be constructed of .010 inch thick aluminum.

The charge-air cooler shall be mounted directly in front of the engine coolant radiator. To reduce vibration rubber "iso" mounts shall be used for mounting of the charge-air cooler to the engine radiator.

The charge air cooler shall contain (12) rows of internal fins within a .313 x 2.632 aluminum tube assembly. This tube assembly shall be constructed of .025 thick aluminum.

The charge-air cooler shall contain thermal expansion slots to allow the expansion and contraction of the charge-air core over the wide range of temperatures that are expected in operation.

The charge air piping between the engine and charge-air cooler shall be aluminum tubing with a wall thickness of .065 inch. The system shall utilize four (4) ply silicone rubber woven Nomex hoses with stainless steel pressure bands. These bands are designed to maintain the hose shape under the pressure of the turbocharger boost air. All clamps used on the charge air piping are to be stainless steel constant torque and shall be installed at each joint.

DIESEL ENGINE

The chassis shall be powered by a Cummins diesel engine as described below:

- MODEL: ISL
- NUMBER OF CYLINDERS: Six
- BORE AND STROKE: 4.49" x 5.31"
- DISPLACEMENT: 506 cu. in. (8.3L)
- RATED BHP: 400 @ 2000 RPM
- TORQUE: 1250 @ 1300 RPM
- COMPRESSION RATIO: 17.0:1
- GOVERNED RPM: 2200

Standard Equipment on the engine to include the following:

- GOVERNOR: Limiting speed type
- TURBOCHARGER: Wastegate design for increased boost at lower engine speed.
- INJECTORS: Electronically controlled.
- FUEL PRIMING PUMP: High capacity fuel lift pump for C Series engines.
- AIR CLEANER: Farr or equal with fresh air intake.
- OIL FILTER: A full flow / by-pass combination
- LUBE OIL COOLER: Non-drainback, thermostatically controlled with full flow cooling.
- FUEL/WATER SEPARATOR: The Cummins engine shall be equipped with a integrated fuel / water separator and a water in fuel sensor. The filter shall have a self venting drain valve in the bottom of the filter. This filter shall be able to remove up to 95% of dissolved water and up to 99% of free standing water.
- STARTER: A DELCO, 12 volt, 41 MT type 300 starter motor.
- AIR COMPRESSOR: A Wabco 18.7 cfm compressor shall be provided.

ENGINE WARRANTY

The engine shall have the standard 5 year Cummins Warranty.

EXHAUST BRAKE

The chassis shall have an exhaust engine brake installed on the engine.

The driver's dash shall include an ON / OFF engine brake control switch.

Activation of the engine exhaust brake shall occur at zero throttle position. The transmission ECU shall be programmed to operate in the pre-select downshift mode to maximize the retarding power of the engine brake.

The brake lights shall illuminate when the JACOBS Extarder brake in operation.

The exhaust brake shall become inoperative when the chassis is in pump mode.

The "JACOBS" engine exhaust brake shall be covered under the standard five year Cummins engine warranty.

ENGINE FAST IDLE

The chassis shall be equipped with an Electronic Idle Control (EIC) for the electronic engine. Preset speed is factory adjustable.

The fast idle provision shall only function when the parking brake is set and the transmission is in neutral.

Control of the fast idle is by an overhead console mounted switch.

ENGINE COOLANT FILTER

A pre-charged spin-on corrosion inhibitor/water filter shall be installed in the cooling system. Shut off valves shall be supplied on both sides of the filter to facilitate element changing with out loss of cooling system fluid.

COOLANT HOSES

The entire chassis cooling system shall have premium rubber hoses. All clamps to be stainless steel worm drive type clamps.

AUXILIARY ENGINE COOLER

The cooling system shall have one (1) SENDURE auxiliary engine cooler mounted in the upper radiator water pipe. The apparatus shall have the fire pump water circulated to the cooler from a valve located on the apparatus pump panel.

SPARK ARRESTOR

A spark arrestor shall be installed in the chassis air intake system. This arrestor shall be mounted in the behind the intake grille to filter out airborne embers.

EXHAUST SYSTEM

A single exhaust pipe shall be provided for the engine. The exhaust pipe shall be supplied with a 1500 degree, fiberglass tape with vermiculite. The wrap shall extend from the engine turbo charger to just below the frame rail. The 90 degree tail pipe shall terminate on the right side directly ahead of the rear wheels. The exhaust pipe tube shall be cut on the end with a 45 degree cut.

EXHAUST SYSTEM

The aluminized muffler shall be located under the frame on the right side of the apparatus.

TRANSMISSION

The transmission shall be an Allison 3000EVS automatic transmission with electronic controls.

TRANSMISSION COOLER

An automatic transmission cooler shall be provided as an integral part located in the bottom tank of the radiator. It shall be designed to withstand 165 psi working pressure and an intermittent pressure of 250 psi. The cooler shall be of sufficient size to maintain the operating temperature within the recommended limits of the transmission manufacturer.

FIVE SPEED TRANSMISSION

The transmission shall be programmed for five speeds. The transmission shall have the following gear ratios.

- First - 3.49
- Second - 1.86
- Third - 1.41
- Fourth - 1.00
- Fifth - 0.75
- Reverse - 5.03

The chassis shall be geared for the top speed in 5th gear.

TRANSMISSION SHIFTER

The transmission shall be controlled by a electro-mechanical lever type shift control. It shall be internally illuminated for night operation and have an internal lock (hold override button) to securely hold the shifter in the position selected.

DRIVELINES

Universal joints and driveshafts shall be SPICER 1710 series. The driveshaft tube shall be a minimum of 4.0" diameter with a .134" tube wall thickness. The driveshaft slip joints shall have Spicer "Glidecoat" to reduce sliding friction and thrust under high torque loads. All drivelines shall be balanced to prevent vibration.

STANDARD TRANSMISSION WARRANTY

The chassis shall have a five (5) year unlimited mileage / Parts & Labor warranty for the Allison transmission.

FUEL TANK

The fuel tank shall have a capacity of 50 gallons (

The fuel tank sending unit is to be mounted to the Driver's side of the fuel tank for easy replacement.

FUEL LINES

Polyamide fiber, nylon braided, reinforced tubing with push-on reuseable fittings shall be provided for the chassis fuel lines.

FUEL/WATER SEPARATOR

The Cummins engine shall be equipped with a fuel/water separator with a bottom drain valve. This filter shall be able to remove up to 95% of dissolved water and up to 99% of free standing water.

CUSTOM FIRETRUCK CAB WITH 12" RIASED ROOF

The cab shall be capable of seating up to six (6) fire- fighters and be of a one-piece tilting, contoured front, fully enclosed design. It shall have four (4) side doors and be a 96" wide custom aluminum cab-over engine forward style. The cab shall have an "Open Space" design, free of interior walls or obstructions.

CAB MATERIALS

The cab construction shall have the following material gauges as a minimum:

- Cab floor - 3/16" (.190") aluminum
- Front skin - 3/16" (.190") aluminum
- Cab side panels - 3/16" (.190") aluminum
- Cab rear wall - 3/16" (.190") aluminum
- Cab roof - 3/16" (.190") aluminum
- Cab doors - 3/16" (.190") aluminum

Roof Panel Rails - The roof panel assembly shall have extruded hat section supports bonded to the roof skin. These roof hat sections shall be joined to the Cab Roof Rail Section to complete the upper cab skeletal structure. These completed Roof Panel Rails shall provide a grid for maximum roof strength. The roof shall support a minimum weight of 250 lbs. / sq. ft. without permanent roof deformation.

Rear Wall Rails - The rear wall assembly shall have extruded hat section supports bonded to the wall skin. These sections shall be joined to provide a rear wall grid structure for maximum strength.

Cab Front Wall - The front wall of the cab shall be designed with a double wall construction to reduce the effects of exterior noise in the crew and operator compartment.

Engine Enclosure - The engine doghouse shall be constructed of welded aluminum and shall be welded into the cab as an integral part of the cab.

CAB DIMENSIONS

The cab shall have the following overall dimensional requirements:

- Overall Width - 96 inches
- Center of front axle to back of cab - 54 inches
- Center of front axle to front of cab - 74 inches
- Windshield area - 3624 sq. inches minimum
- Front Grille Opening - 478 sq. inches minimum
- Side Grille Opening - 63 sq. inches each min.
- Cab full tilt angle - 45 degrees minimum
- Cab full tilt height - 181 inches maximum

Cab interior dimensions shall be provided as a minimum in the following chart:

- Driver's Lower Step Size - 10-1/2" deep minimum
- Driver's Lower Step Size - 30" front to back
- Officer's Lower Step Size - 10-1/2" deep minimum
- Officer's Lower Step Size - 30" front to back

Crew cab seating position:

- Cushion to Roof - 51-1/2 inches minimum

FRONT CAB DOORS

The forward cab doors shall be 74" high x 37" wide and shall have roll down windows and fixed front corner windows. The front door windows shall have a minimum of 702 square inch area of viewing glass per door. Each window shall have an exterior glass weatherseal to prevent the influx of exterior air. The doors shall have exterior and interior paddle latches for ease of opening with a gloved hand. The paddle latches are to have a rubber gasket, on the outside, separating the handle from the finished painted surface. Each door shall be of the flush mounted design having exposed, polished, one-piece, 12 gauge stainless steel piano hinges with 1/4" hinge pins.

The cab doors shall be covered with an automotive styled ABS panel that is covered with vinyl to match the interior trim color. The front door panels shall have map pockets in each door.

REAR CAB DOORS

The rear cab doors shall be of the "NO KNOCK" type and shall be located directly behind the front wheel well area. These doors shall be 86-3/4" high x 30" wide and shall be a flush type door with exposed, polished, full length 12 gauge stainless steel piano hinges with 1/4" hinge pins. Each door shall have roll down rear windows. The rear doors shall have a minimum of 546 square inches of viewing area per door. Each window shall have an exterior glass weatherseal to prevent the influx of exterior air. The doors shall have interior and exterior paddle latches, and shall be mounted in an easy to reach location. Interior latch shall not be blocked by the seat occupant. The paddle latches are to have a rubber gasket, on the outside, separating the handle from the finished painted surface.

INTERIOR DOOR LOCKS

All doors shall have interior door locks and exterior keyed door lock controls. The door locks and the finished door assemblies shall be in conformance with FMVSS 206, with specific adherence to 49 CFR 571.206 Section 4.1.3 requiring that "Each door shall be equipped with a locking mechanism with an operating means in the interior of the vehicle". All doors shall be keyed alike. The doors shall be equipped with appropriate safety interlocks to prevent accidental locking of the doors when closed.

INTERIOR CAB STEP TRIM

The cab steps shall be completely enclosed behind each door. The top of each step shall be covered with aluminum treadplate trim.

INTERIOR CAB TRIM

The cab front interior shall have a one-piece, removable, sound absorbing headliner to cover all wiring and tubing used for lights and antenna leads. The rear headliner shall be a two-piece design similar to the front.

The rear interior wall of the cab shall have a one-piece, removable, wall covering to finish the interior trim and cover all wiring and tubing used for lights and antenna leads.

The cab dash shall be an ABS automotive styled housing with vinyl covering. A locking ABS automotive styled glovebox with an 18" long grab handle for the Officer shall be furnished on the right hand side of the cab. The instrument and glovebox housings shall be symmetrical in design for a pleasant appearance. The glovebox shall be equipped with a cigar lighter socket with sufficient wiring to handle a 1,000,000 candlepower hand held spotlight. The glovebox shall also include an interior mounted, individually switched light.

CAB GLASS

AS-1 safety laminate glass shall be used in a two piece, wrap around design with a minimum 3624 square inches of windshield area for maximum visibility.

The windshield shall be a type which is readily available from a nationally recognized automotive glass manufacturer that maintains local distribution outlets.

All glass shall be tinted.

All fixed glass shall be installed with a one-piece triple locked rubber lacing material. Due to long term appearance two-piece chrome trim lock lacing is not desired.

SUNVISORS

Two (2) 17-1/2" by 9" black padded sunvisors shall be supplied, one on each side of the windshield. Vertical adjustment shall be a minimum of 15" to allow maximum coverage.

RADIO / STORAGE COMPARTMENT

Beneath the officer's seat there shall be a storage/radio compartment approximately 19-1/2" wide x 17" long x 7" high. The compartment shall be enclosed on three sides. Access to this box shall be through an opening on the right hand side. The driver's side box shall have identical dimensions and shall have access through a louvered aluminum diamond plate bolt on door on the front of the seat box.

HEATER / DEFROSTER

A 57,600 BTU heater with a three speed fan shall be mounted in the front of the cab, centered over the windshield. This heater shall have six (6) adjustable vents to assure windshield defogging.

WINDSHIELD WIPERS

Two speed electric pantograph wipers shall be installed. These wipers shall have minimum 24" blades and have 28 1/2" wet arm electric pump washers. A 70 oz. minimum windshield washer reservoir shall be furnished. The reservoir shall be mounted inside the cab to eliminate the need to tilt the cab to fill it.

STEERING WHEEL AND COLUMN

The steering column shall be a DOUGLAS tilt / telescopic type with an integral high beam / turn signal control switch. The column shall have self cancelling design for the turn signal switch. A 4-way warning "Hazard" light switch shall be mounted on the column. For safety, a rubber boot shall be installed to cover the steering shaft from the dash to the floor.

The steering wheel shall be a minimum of 18 inch diameter, covered with a padded absorbite finish. The telescopic feature of the steering column shall be controlled by a lever on the left side of the steering column.

EXTERIOR GRAB HANDLES

The cab shall have a bright anodized extruded aluminum 24" grab handle at each door position. The aluminum shall be bright anodized for long service. Molded rubber gaskets shall be installed under the grab handles to protect the painted surface of the cab.

FASTENERS

All cab exterior fasteners shall be stainless steel type fastened to the cab with nutserts.

BATTERY ACCESS

The rear cab steps shall have a removeable kick panel, providing access to the batteries for routine maintenance and inspection.

CAB CORROSION TREATMENT

The cab shall have a corrosion preventative material conforming with Mil Spec C-16173-C, Grade 1, applied during and after construction. A 10 year warranty against perforation due to rust or corrosion shall be furnished for the cab.

ENGINE DOGHOUSE

The engine enclosure shall have a hinged and latched panel to provide access to the engine oil dipstick, power steering fluid reservoir dipstick and engine coolant recovery reservoir. This access shall allow that these fluid levels can be checked and topped off, if required, without raising the cab.

The engine doghouse shall be covered on the inside of the cab with "Wispermat Barrier" material. The under side of the engine enclosure shall be covered with a sandwiched material for interior cab noise and heat rejection. This sandwiched acoustical material shall have one layer of 1/8" foam, a 3/16" single barrier septum and a 7/8" layer of foam to provide on overall thickness of 1-3/16". The sandwich material shall be chemically bonded to prevent layer separation. A finished surface treatment of metalized film shall be provided on the engine side of the barrier. The acoustical barrier shall be held in place with mechanical fasteners in addition to adhesive.

TRANSMISSION OIL LEVEL SENSOR

The transmission shall be equipped with the oil level sensor (OLS). This sensor shall allow the ope-rator to obtain an indication of the fluid level from the shift selector. The sensor display shall provi-de the following checks, correct fluid level, low fluid level and high fluid level. Access to the power steering fluid maybe limited.

COOLANT RECOVERY SYSTEM

A coolant recovery system shall be installed on the chassis. This tank is designed to capture cool-ant overflow when the engine coolant warms and expands. As the engine cools the overflow is then pulled out of the tank and back into the radiator, thus maintaining proper coolant levels.

CAB GRILLE

All cab exterior grilles shall be bright finished stainless steel. The front grille shall have a radiator rock guard to assist in preventing damage to the radiator core.

The cab shall have one (1) engine "hot" air exhaust and one (1) engine air cleaner intake, on each side of the cab. These openings shall be covered with a honey comb wire screen and shall have a bright polished stainless steel outer grille.

CAB GROUND LIGHTING

One (1) light shall be mounted beneath each door. These lights shall be designed to provide illumination on areas under the driver and crew riding area exits. All cab ground lights shall switchable and shall automatically activate when any cab exit door is opened.

AIR HORNS

Dual Grover Stuttertone air horns shall be recessed into the front bumper, (1) each side, outboard of the frame rails located 44.75" apart. The air horns shall be mounted with the Grover supplied mounting brackets.

FLOOR SWITCHES

One (1) foot switch for the air horns shall be provided on the left side of the driver's side cab floor and the right side of the officer's side cab floor. These foot switches shall be wired to control the apparatus air horns.

MIRRORS

Two (2) single piece bright finished stainless steel West Coast Mirrors with 16-1/2" x 7" flat mirror heads shall be supplied an additional 5-1/2" x 8-1/2" rectangular lower convex mirror shall also be supplied. These mirror heads shall be mounted on spring loaded RETRAC arms.

CAB SIDE WINDOWS

Two AS-2 tempered glass, fixed side windows, 26-1/2" high x 16" wide shall be furnished, one on each side behind the forward doors. All glass shall be tinted. These windows shall be installed with a one-piece triple locked rubber lacing material.

COMPARTMENT OPEN LIGHT

A Red Open Compartment Flashing Light, WELDON 1-2030-7120, shall be mounted on the face of the overhead panel.

This compartment open door light is wired with a flasher to the power panel for bodybuilder completion to the compartment door open circuit on the body.

The compartment open light circuit shall be wired so that the light circuit is deactivated when the parking brakes of the apparatus are applied.

INTERIOR CAB LIGHTING

Four (4) dome lights shall be supplied. One light shall be installed immediately above each door position. These lights shall be illuminated when any door is open or individually operated with a switch mounted on the light and the battery switch is in the on position.

ICC MARKER LIGHTS

Five (5) LED cab face mounted clearance lights shall be supplied, mounted above the windshield, in conformance with FMVSS 108.

HEAD LAMPS "ON" IGNITION CONTROL

When the ignition switch is in "on" the head lamps shall be illuminated to 80% brilliance.

ICC MARKER LIGHTS

Two (2) side combination clearance / turn signal lights shall be supplied, one (1) each side mounted ahead of the front door.

HEADLIGHTS

Four (4) rectangular halogen headlights shall be supplied mounted in a chrome plated bezel. These headlights shall be mounted in the lower position on the front of the cab.

TURN SIGNALS

Two (2) rectangular halogen turn signal lamps shall be mounted above the headlights in a chrome plated bezel. These lights shall be supplied with an amber arrow cover.

FRONT WARNING LIGHTS

Two Whelen LED red warning lights shall be supplied mounted above the headlights in a chrome plated bezel inboard of the turn signals.

CAB FRONT WARNING LIGHT CONTROLS

Control of the LED warning lights shall be by the Emergency Warning Light Switch for both "Calling of Right of Way" and "Blocking Right of Way" modes.

EXTERIOR WALL DIAMOND PLATE

The cab exterior rear wall shall be covered with a single sheet of bright aluminum tread plate to protect the back of the cab from scratches.

CAB FENDERETTES

Polished aluminum fenderettes shall be installed across the top of the wheel openings. An extruded rubber gasket is to be installed between the fenderette and the cab to reduce the possibility of electrolysis between the dissimilar materials. The fender shall be 12 inches wide and shall be .08 inches thick.

CAB TILT SYSTEM

The cab shall tilt a minimum of 45 degrees for ease of serving. Tilting shall be accomplished by means of a tilt pump connected to two (2) heavy duty lift cylinders. It shall be equipped with a positive locking mechanism (service lock) to hold the cab in the full tilt position. Release of the service lock shall be by means of a pull type cable assembly. The cylinders shall have a velocity fuse at the base to prevent the cab from falling in the event of a hydraulic hose failure. The cab shall be capable of tilting 90 degrees for major engine service, if necessary. The 90 degree cab tilt shall be accomplished by removing the cab cylinder pins, removing one bolt in the steering shaft, and removing the front bumper and treadplate.

The cab shall have a three (3) point cab locking system. To prevent undue stresses in the cab, the cab mounting shall incorporate a five (5) point load mounting system.

The front cab pivot/lock assemblies shall utilize four (4) radially loaded, bonded rubber, axial mounts. These mounts shall have a maximum radial load rating of 925 pounds each and a torsional rating of 25 lbs-in/deg. Two one (1) inch diameter cab pivot pins shall be installed at the front of the cab. Each pivot pin shall have a grease fitting to allow for lubrication to the pivot area.

The rear cab lock shall be centerpoint mounted to prevent normal twist of the chassis from affecting the cab mounting, cab structure and windshield areas of the cab. This rear cab lock shall be mounted on a chassis crossmember to provide a stable platform for the locking system. This locking system shall automatically open prior to the cab tilting and automatically relatch when the cab is lowered completely into the travel position.

Two (2) outboard frame mounted urethane "V" blocks shall be provided at the rear of the cab. These dual purpose mounts shall align the cab upon lowering as well as provide non-latching support for the cab in the down position. With this system, extreme chassis twist shall allow the cab to move independently of the rear cab supports, reducing the structural stress damage often caused by outboard dual cab locking systems.

An electric-over-hydraulic cab tilt pump shall be supplied. This pump shall have a remote control for cab tilting operation. The control shall be "safety-yellow" in color

CHASSIS PAINT

The frame and running gear shall be painted gloss black enamel. The running gear shall consist of the axles, drivelines, air tanks, steering gear, frame mounted brackets, draglink(s), and fuel tank.

The air system piping and electrical harnesses shall not be installed in the frame at the time of the frame painting. This shall insure complete coverage of paint behind those areas, as well as to insure that the air piping and wiring harnesses do not have paint applied to them, hindering troubleshooting.

INTERIOR FINISH

The interior of the cab shall be painted with spatter paint, textured gray in color. The spatter paint is selected for ease of repairs when the interior is scratched.

The exterior doors and all fixed cab glass is to be removed from the cab prior to the painting process beginning.

The cab metal finish shall be covered with one coat of base self-etching primer to fill the small surface imperfections.

Then the interior of the cab is to be blocked and a coat of sealer-primer is to be sprayed to the exterior finish.

Next a sealer-primer is applied and shall be sanded to a smooth finish ready for final color coat application.

Two (2) coats of finished paint is to be applied to a final thickness of 4 mills.

The following interior components shall be covered in gray vinyl to match the interior paint color:

- All seating
- Headliner
- Rear wall padding
- Door Panels-ABS

The following interior components shall be covered in gray hush cloth material.

- Floor mats
- Doghouse
- Doghouse covering
- Floor covering (mats)

CAB EXTERIOR FINISH (TWO TONE)

The exterior doors and all fixed cab glass is to be removed from the cab prior to the paint and body process beginning.

The final finish of the cab shall be to fire apparatus standards; exhibiting excellent gloss durability and color retention properties.

FLOOR COVERING

The front and rear floor areas of the cab shall be covered with "HUSHCLOTH" sound barrier floormats. This floormat shall be a three ply material with a 3/16" thick open cell isolation barrier of Polyurethane, a 3/32" thick closed cell Nitrile mid barrier for section reinforcement, and a 1/16" thick embedded pebbled grain wear surface.

SEAT BELT WARNING LABELS

The cab shall be equipped with two (2) seat belt warning labels. These labels are to be in full view of the occupants in the seated position.

DRIVER'S SEAT

The driver's seat shall be a Seats, Inc. 911 air ride driver's seat. The seat shall be of the high-back style. The seat shall have adjustments for height and ride adjustment. The fore / aft adjustment of the seat shall be six (6) inches and contain a fore / aft shock absorber. The bottom seat cushion shall contain a contoured thigh support. The seat covering shall be heavy duty vinyl upholstery.

OFFICER'S SEAT

A SEATS, INC. SCBA Officer's Fixed Seat with split head rest shall be supplied. The seat shall contain a S.C.B.A. filler pad for when the bottle is not in use. The seat upholstery shall be heavy duty vinyl.

OUTBOARD REAR FACING/INBOARD FORWARD FACING CANOPY SEATS

The two (2) outboard rear facing canopy seats shall be SEATS, INC. 911 Series Self-contained Breathing Apparatus (SCBA) type seats.

The two (2) inboard forward facing canopy seats shall also be SEATS, INC. 911 Series Self-contained Breathing Apparatus (SCBA) type seats.

The SCBA seats shall have split head rest.

The seat covering shall be heavy duty vinyl upholstery.

SHOULDER HARNESS

Shoulder harness seatbelts for Driver/Officer positions shall be provided.

All rear facing seating positions shall be provided with lap type, metal to metal quick release seat belts, with automatic seat belt retraction.

The forward facing crew area seats shall be provided with shoulder harness seatbelts.

The seat belts shall be red in color.

45,000 BTU AIR CONDITIONING

A climate control system shall be furnished in the cab. The system shall consist of a 45,000 BTU air conditioning evaporator with a 36,000 BTU auxiliary heater.

The system is to have a 12.6 cu. In. Minimum compressor mounted on the engine to provide the compressed refrigerant to the system. The compressor is to be plumbed to a heavy duty truck, twin fan air conditioning condenser mounted on the cab roof. The condensing unit shall have an aerodynamic shroud that is painted to match the color of the cab roof. There shall be an extended life filter receiver/dryer with a pressure relief valve installed to protect the system from contaminates, moisture, and high pressure. It is to have a sight glass for visual inspection and ease of service.

The air conditioning evaporator shall be centrally mounted on the rear of the engine enclosure in the cab. The evaporator shall have an externally equalized expansion valve and be thermostatically protected to prevent freeze up. Dual high performance 3-speed blowers shall provide a minimum of 700 CFM air flow. Each blower is to be controlled separately. Four (4) forward facing and three (3) rear facing full adjustable diffusers with shutoff capability shall be utilized to direct the air flow through the cab.

The air conditioning on/off switch, thermostat control, and blower switches shall be located on the evaporator unit.

The air conditioning system shall use R134A freon.

36,000 BTU AUXILIARY HEATER

A 36,000 BTU auxiliary heater is also to be furnished inside the conditioning evaporator unit to provide additional cab heating during cooler weather. The heater core is to be plumbed to the water lines of the engine cooling system.

CAB INSULATION

Foam rubber type insulation shall be installed in the rear wall and the cab ceiling to provide a better sound and heat barrier. The insulation shall be a minimum of 1" thick. The material shall be compliant with FMVSS-302.

DRIVER INSTRUMENTION AND CONTROLS

The cab dash panel shall have black textured anti-glare surface. This panel shall have a wrap around feature for easy viewing of the instrumentation. The dash panel shall be a single piece design. Each panel shall be removable for access to the gauges and wiring. These gauges shall have digitally driven analog displays for accuracy to 1 degree angular. The gauges shall have red LED back lighting for enhanced visibility. Upon on initial ignition sequence a lamp check function shall illuminate the warning light telltales, the self diagnostic message center shall sequence the warning light telltales if data link communications are lost. The instrument panel shall include the following gauges and indicators.

- Electronic tachometer with **LCD hour meter**
- Electronic speedometer with **LCD trip odometer**
- Engine coolant temperature gauge. With high temperature warning light and buzzer
- Engine oil pressure gauge, with warning light and buzzer
- Transmission fluid temperature gauge, with high temperature warning light and buzzer
- Dual air pressure gauges, with low air pressure warning light and buzzer
- Voltmeter, with low voltage warning light and buzzer
- Fuel level gauge
- High beam indicator light
- Parking brake set light
- Turn signal indicator lights

The lighting control panel is to be located to the left side of the instrument panel. This panel shall have a black textured anti-glare surface. The lighting control panel shall include the following:

- Headlight control switch
- Dash rheostat for instrumentation lighting control
- Wiper and washer control switches

The engine control panel is to be located beneath the instrument panel on the driver's right hand side. The panel shall have a black textured anti-glare surface. The engine control panel shall include the following:

- Keyless ignition switch with a green pilot light
- Parking brake control valve

The apparatus control panel is located beneath the instrument panel on the driver's left hand side. The panel shall have a black textured anti-glare surface. The apparatus control panel can be utilized for the pump shift controls.

TRANSMISSION OVERHEAT WARNING LIGHT

A Transmission temperature light & buzzer shall be provided on the dash panel.

LOW VOLTAGE WARNING

A low voltage indicator light shall be installed on the dash. An alarm and the dash indicator light shall activate when the system voltage drops below 11.8 volts.

DRIVERS SIDE OVERHEAD SWITCH PANEL

The apparatus warning light panel shall be mounted above the driver in the overhead console. The panel shall have a black anti-glare surface, and be angled for easy viewing of the driver. The panel shall include the following switches:

- One (1) lighted master control switch to allow for pre-selection of the other switches.
- Thirteen (13) lighted individual lighting control and chassis option switches.

Each switch shall have back-lit legends with a 100,000 hour lamp for illumination.
Body Flasher

The master lighting control switch shall be wired to three (3) 30 amp circuit breakers and three (3) 40 amp relays. Three (3) 10 gauge wires are powered by this circuit and run to the roof for lightbar power. The remaining switches shall be wired to 20 amp circuit breakers and relays.

INTERMITTENT WIPER CONTROL

A rotary combination intermittent electric wiper / washer switch shall be provided on the left hand side of the driver's dash.

EMI/RFI PROTECTION

The apparatus shall incorporate the latest designs in the electrical system with state of the art components to insure that radiated and conducted electromagnetic interference (EMI) and radio frequency interference (RFI) emissions are suppressed at the source.

The apparatus proposed shall have the ability to operate in the environment typically found in fire ground operations with no adverse effects from EMI/RFI.

EMI/RFI susceptibility is controlled by utilizing components that are fully protected and wiring that utilizes shielding and loop back grounds where required. The apparatus shall be bonded through wire braided ground straps. Relays and solenoids that are suspect to generating spurious electromagnetic radiation are diode protected to prevent transient voltage spikes.

In order to fully prevent the radio frequency interference the purchaser shall be requested to provide a listing of the type, power output, and frequencies of all radio and bio medical equipment that is proposed to be used on the apparatus.

ALTERNATOR

A LEECE-NEVILLE 270 amp alternator shall be installed on the engine. This alternator is internally rectified and regulated.

CHASSIS ELECTRICAL SYSTEM

The apparatus "Electrical Distribution System" (EDS) shall be mounted inside the cab to prevent moisture from entering the area. It shall be mounted under the dash on the officer's side behind a diamond plate cover.

The EDS shall be fed by one power stud:

One (1) battery positive

The battery positive stud is to be controlled by the master disconnect switch mounted on the lower right dash panel. A green light shall indicate when the ignition circuit(s) are energized.

EDS MODULE

The EDS system shall be designed with locally available **plug-in** circuit breakers and **plug-in** relays. Each component position shall be labeled to indicate it's function. All electrical connections shall be insulated and secured behind the panel face to eliminate the chance of accidental electrical shorts while performing electrical system service.

The EDS shall control a minimum of thirteen (13) low voltage, analog switched, high amperage electrical loads.

Provision for a minimum of thirty-one (31) automatic reset circuit breakers is required to protect the vital circuits of the apparatus.

The EDS system shall be removable with only four (4) fasteners for major electrical service or modifications.

The EDS panel shall have one (1) lamp for illumination of the panel during service.

CHASSIS COLOR CODED WIRING

All chassis wiring shall be type "GXL" in accordance with S.A.E. J1128 and NFPA-1901. ALL wiring shall be **COLOR CODED** and continuously marked with the circuit number and function.

All wiring to be covered in nylon heat resistant "HTZL" loom rated at a minimum of 300 degrees F exceeding the heat requirements of NFPA-1901.

A battery "loop back" ground circuit shall be supplied for the EDS system to reduce the possible effects of Electromagnetic and Radio Frequency Interference.

The chassis cab, engine and transmission shall be electrically bonded to the chassis frame rails with braided ground straps.

ELECTRICAL SYSTEM CONNECTORS

All multiple conductor electrical connections shall be made with Packard electrical connectors. The Packard connectors shall become mechanically locked when mated.

All single wire terminations requiring special connectors with A ring or spade terminal shall be crimped, and wrapped with heat shrink tubing.

BATTERY BANK

A single battery system shall be provided, utilizing three (3) high cycle type Group 31 batteries.

This system shall be capable of engine start after sustaining a continuous 150 amp load for 10 minutes with the engine off (NFPA-1901, 1996 edition S9-4.2).

A battery disconnect switch (Rated at not less than 250 amps continuous) shall be used to activate the system and provide power to the power panel. A green pilot light shall illuminate to indicate that the1 battery bank is activated.

All battery wiring shall be "GXL" battery cable capable of handling 125% of the actual load. It shall be run through a heat resistant flexible nylon "HTZL" loom rated at a minimum of 300 degrees Fahrenheit. All cable connections shall be machine crimped and soldered.

STARTING CIRCUIT

One (1) engine start button is to be located on the lower right dash panel. It shall be wired to heavy duty solenoid rated at not less than 1100 amps. The battery indicator light is to be located directly above the start button to indicate that the battery bank is on.

MANUALS AND DOCUMENTATION ON CD

The following manual guides and parts information CD will be required with the delivery of the apparatus.

Two-(2) sets of the following will be supplied:

- Operator Manual
- Parts List
- Electrical Wiring Diagrams
- Electrical Troubleshooting Guide
- Air System Diagram
- Hydraulic System Diagram

CARRYING CAPACITY PLATE

There will be a permanently attached plate mounted in plain view of the driver in accordance with NFPA 1901 Standards.

The tag will include the following:

- Overall height
- Overall length
- GVWR
- Seating capacity

SEATING CAPACITY PLATE

There will be a permanently attached plate mounted in plain view in the cab. The plate will read "Seating Capacity - 6 People".

Each seating position that is not, intended to be used during transit will be individually labeled as follows: Warning: This seat is not to be occupied while vehicle is in motion.

FLUID CAPACITY PLATE

A permanently affixed fluid date plate will be installed in the driving compartment to indicate the type and quantities of the following fluid used in the vehicle.

A.	Engine Oil
B.	Engine Coolant
C.	Chassis Transmission Fluid
D.	Pump Transmission Lubrication Fluid
E.	Pump Primer Fluid
F.	Drive Axle(s) Lubrication Fluid
G.	Air Conditioning Refrigerant
H.	Air Conditioning Lubrication Oil
I.	Power Steering Fluid
J.	Cab Tilt Mechanism Fluid
K.	Transfer Case Fluid
L.	Equipment Rack Fluid
M.	Air Compressor System Lubricant
N.	Generator System Lubricant
O.	Front Tire Pressure - Cold
P.	Rear Tire Pressure - Cold

The following information will also be supplied on the Fluid Data Plate:

A.	Chassis Manufacturer
B.	Production Number
C.	Paint Number
D.	Year Built
E.	Date Shipped
F.	Vehicle Identification Number

OCCUPANCY/SEAT BELT PLATE

There will be provided and installed plate(s), which read, "Occupants must be seated and belted when the apparatus is in motion". This plate(s) will be visible from each seated position.

OVERALL HEIGHT PLATE

A height of vehicle plate will be mounted in the driving compartment and clearly identified and visible to the driver while seated. The plate will show the completed fire apparatus height, length, (in feet and inches) and gross vehicle weight (in pounds). The information will be current to the apparatus manufactured date.

If changes of the vehicle occur while in service, the fire department must revise the height plate.

APPARATUS MOVEMENT WARNING PLATE

A permanently affixed warning plate will be installed near the door ajar light. The plate will read:

"DO NOT MOVE APPARATUS WHEN LIGHT IS ON".

DO NOT RIDE PLATE

A permanently affixed warning plate will be installed stating "DO NOT RIDE". The plate will be located on the apparatus at the rear step area, and at any cross walks if they exist. The plate is to warn personnel that riding on or in these areas while the vehicle in motion is prohibited.

REFLECTIVE MATERIAL

There will be 96 square inches of reflective material installed on the inside of the driver, officer, and crew doors.

LOCK UP

An electronic lockup relay system will be installed between the engine and transmission and the fire pump. The lockup will place the transmission into the 1:1 gear automatically for pump operations.

FRONT MUD FLAPS

Mud flaps will be made from black hard rubber and installed at the rear of the front cab fenders.

REAR MUD FLAPS

Mud flaps will be made from black hard rubber and installed at the rear of the rear body fenders.

12-VOLT BATTERY CHARGING RECEPTACLE

There will be a Kussmaul model 5678 C, 12-volt male power inlet receptacle wired to the 12-volt chassis batteries. The receptacle will be configured to allow a remote 12-volt DC power source to charge the batteries. A matching male plug will be provided and shipped loose with the apparatus.

SHORE POWER INLET PLATE

A shore-power "Inlet Plate" will be permanently affixed at or near the power inlet. The plate will indicate the following:

- Type of Line Voltage
- Current Rating in Amps
- Power Inlet Type (DC or AC)

GRAVELSHIELD FOR EXTENDED BUMPER

There will be a gravelshield installed on the extended front bumper. The gravelshield will be constructed of 1/8" (.125") aluminum treadplate.

FRONT BUMPER COMPARTMENT

There will be a compartment installed in the extended front bumper gravelshield, center. The compartment will be constructed of 1/8" (.125") smooth aluminum plate.

One-(1) compartment restraining strap provided with quick release buckle.

REAR TOW EYES

There will be two-(2) 3/4" thick rear tow eyes constructed of A-36 steel mounted below the frame at the rear of the vehicle. The tow eyes will be attached to steel weldments that are mounted to the apparatus. The eyes will have a minimum dimension of three-(3) inches.

ANTENNA INSTALLATION

There will be an antenna supplied by the customer and installed by the apparatus body builder.

The items must be sent to the manufacturer in advance, and marked with name and shop order number for identification.

RADIO INSTALLATION

The radio supplied by the Fire Department will be installed as directed by the apparatus body builder.

The items must be sent to the manufacturer in advance, and marked with name and shop order number for identification.

RADIO POWER CIRCUIT

A 50 amp switched battery power circuit for use as main power to activate the radio will be supplied. The breaker will be manual reset and terminate center of the dash.

CIGAR LIGHTERS (2)

There will be two (2) dash mounted cigar lighter provided in the chassis.

STAINLESS STEEL WHEEL COVERS

One (1) set of stainless steel "Deep Dish" style wheel covers will be installed on all wheels. The full wheel liners will include axle and lug nut covers.

EMS COMPARTMENT

One (1) EMS compartment constructed of 1/8" smooth aluminum will be mounted in the cab. This cabinet will be installed forward facing outboard the center seats (driver's sid) and finished with a gray spay on polyurethane liner.

The top of the compartment shall have an additional storage area.

One-(1) roll-up compartment door will be installed on the EMS compartment.

One (1) Truck-Lite model 80351 5" diameter light will be installed in the roof of the cabinet and operated by an automatic door switch.

One (1) vertically adjustable shelf will be installed in the EMS cabinet. The shelf will be constructed of smooth aluminum and have a 2" lip at the front and rear of the shelf.

There will be 12-volt power supply installed in the EMS compartment.

MDT AREA

The standard glove box in the stock chassis shall be removed and replaced with a recessed area for laptop mounting. The MDT area shall be fabricated from aluminum and panted to matchthe cab interior.

1500 GPM SINGLE STAGE PUMP - WATEROUS CSU

PUMP ASSEMBLY

The pump will be of single stage construction and comply with all applicable requirements of the latest standards for automotive fire apparatus of the National Fire Protection Association.

The pump will be free from objectionable pulsation and vibration under all normal operating conditions.

The pump body will be closed-grained gray iron and must be horizontally split in two sections for easy removal of the entire impeller shaft assembly, and designed for complete servicing from the bottom of the truck without disturbing setting of the pump in the chassis or apparatus piping, which is connected to the pump. Pump body halves will be bolted together on a single horizontal face to minimize leakage and facilitate reassembly.

The discharge manifold will be cast as an integral part of the pump body assembly. The manifold will provide at least three full, 3-1/2" openings for flexibility and maximum efficiency. The outlets provided will be one on the right side of the pump body, one on the left side of the pump body and one directly on top of the manifold.

The impeller will be bronze with double suction inlets, accurately balanced (mechanically and hydraulically), of mixed flow design with reverse-flow, labyrinth-type, and utilize wear rings that resist water bypass and loss of efficiency due to wear.

The wear rings are to be bronze, and will be easily replaceable to restore original pump efficiency and eliminate the need for replacing the entire pump casing due to wear.

The impeller shaft will be stainless steel, accurately ground to size, and supported at each end by oil or grease-lubricated anti-friction ball bearings for rigid and precise support. Bearings will be protected from water and sediment by suitable stuffing boxes, flinger rings, and oil seals. The impeller shaft will be of two-piece construction separable between the pump and pump transmission to allow true separation of the transmission from the pump without disassembly of either component. No! Sleeve type bearings will be used.

The pump transmission will be rigidly attached to the pump body assembly and be of the latest design incorporating a high strength, involuted, tooth-form Hy-Vo chain drive and driven sprockets capable of operating at high speeds to provide smooth, quite transfer of power. A free sliding collar will accomplish the shift engagement and incorporate an internal locking mechanism to insure that collar will be maintained in ROAD or PUMP position.

For chassis equipped with automatic transmissions, the pump transmission driveline will have a torque-rating equal to or greater than the maximum net engine torque multiplied times the first gear ratio and torque converter ratio.

The suction fittings will include removable, die cast, zinc screens that are designed to provide cathodic protection for the pump, thus reducing corrosion in the pump.

A 3" clapper check valve will be installed between the suction side of the pump and the tank-to-pump valve. This 3" clapper valve will eliminate the possibility of a pressure surge expanding the water tank.

Pump system will utilize an integral discharge manifold system that allows a direct flow of water to all discharge valves.

There will be one-(1) pump panel mounted vernier throttle used to control engine RPM.

The pump system and piping will be engineered for top mount operations. The relief valve control and other control mechanisms will be located on the SIDE mount operator's control panel.

PACKING GLANDS

The stuffing boxes will be integral with the pump body and be equipped with two-piece glands to permit adjustment or replacement of packing without disturbing the pump. Lantern rings will be located at inner ends of stuffing boxes so that all rings of packing can be removed without removal of the lantern rings. Water will be fed into stuffing box lantern rings for proper lubrication and cooling when the pump is operating.

PUMP WARRANTY

The Waterous pump will have a pump warranty to include parts for a period of five-(5) years.

PUMP MOUNTING

There will be extra heavy-duty pump mounting brackets furnished. These will be bolted to the frame rails in such a position to align the pump so that the angular velocity of the driveline joints will be the same on each end of the driveshaft. This will assure full capacity performance with a minimum of vibration.

MANUALS

There will be two-(2) copies of pump manuals provided to the department.

PUMP PANEL TAGS

The pump panel tags for all discharges, gauges, and controls will be color-coded and made out of metal. All gauges and controls will be properly identified with color-coded metal pump panel tags. The color-coded tags will be affixed with 3M industrial adhesive.

U.L. TEST POINTS

An Underwriters Laboratories approved engine counter will be located on the pump panel to provide a means to certify the tachometer. In addition, two-(2) U.L. test plugs will be pump panel mounted for testing of vacuum and pressures.

U.L. CERTIFICATION (1500 GPM)

The vehicle will be third party tested and certified by Underwriters Laboratories, Inc. UL testing is recognized as a leading, third party, "Product Safety Certification" organization for over 100 years. UL has served on the NFPA (National Fire Protection Association) technical committee for over thirty-(30) years.

The testing organization must meet the following minimum requirements:

- Must be nationally recognized testing laboratory recognized by OSHA
- Must comply with the ASTM (American Society for Testing Materials) standard E543 "Determining the qualifications for nondestructive testing agencies"
- Must have more than forty (40) years of Automotive Fire Apparatus safety testing experience and more than fifteen (15) years of factory aerial device testing and Certification experience
- Must not represent, be associated with, or in the manufacture or repair of automotive fire apparatus.
- Must provide proof of ten (10) million dollars in excess liability insurance for bodily injury and properly damage combined

The pump will meet and perform the following test to receive a U.L. Certification.

- 100% of rated capacities at 150 PSI net pump pressure
- 100% of rated capacities at 165 PSI net pump pressure
- 70% of rated capacities at 200 PSI net pump pressure
- 50% of rated capacities at 250 PSI net pump pressure

PUMP CERTIFICATION TEST PLATE

A permanently affixed plate will be installed at the pump operator's panel. It will provide the rated discharge and pressures together with the speed of the engine as determined by the certification test for each unit. It will also provide the position of the parallel/series pump used and the no load governed speed of the engine as stated by the engine manufacturer on a certified brake horsepower curve.

A label will be provided on the pump operator's panel that states the following:

Warning: Death or serious injury might occur if proper operating procedures are not followed. The pump operator as well as individuals connecting supply or discharge hoses to the apparatus must be familiar with water hydraulics hazards and component limitations.

6" LEFT SIDE STEAMER INLET

One-(1) 6" steamer inlet will be provided, on the left side of the pump. The inlet will be complete with long handle chrome cap and 6" screen.

6" STEAMER INLET W/WATEROUS - MONARCH MANUAL VALVE

One-(1) 6" extra short intake with a Waterous Monarch Intake Valve (MANUAL) shall be installed on the right side of the pump. This package includes an intake butterfly valve, nipple, and integral relief valve mounting pad. This package is designed to fit behind the pump panel.

There shall be a Kochek Model SKE-R, 6" FNST Swivel x 5" Storz elbow with cap provided with the apparatus.

2-1/2" LEFT SIDE SUCTION

One (1) 2-1/2" brass valve will be installed on the left side of the pump panel. The valve will be fixed pivot design, plumbed to the suction side of the pump with 2-1/2" piping. The control handle will be located on the side the suction valve. The valve will come equipped with a chrome plug, chain, brass inlet strainer, a 2-1/2" NST chrome inlet swivel and a 3/4" bleeder/drain valve.

A warning plate will be permanently affixed in a location in proximity to the suction inlet. The plate will state:

"WARNING - SERIOUS INJURY OR DEATH COULD OCCUR IF INLET IS SUPPLIED BY A PRESSURIZED SOURCE WHEN THE VALVE IS CLOSED".

TANK TO PUMP

The tank to pump valve will be 3" inline, installed between the water tank and the pump. The valve will be a quarter turn ball type, fixed pivot design and be constructed of bronze. The control will be a chrome push/pull locking "T" type handle and installed on the left pump panel.

MASTER DRAIN

The master drain will have the capacity to drain the pump. The drain will be recessed below the side pump panel, with the control located under the side running boards that are properly labeled. The water discharged from the drain will be routed to drain below the chassis frame rails.

RELIEF VALVE - ELKHART 40

There will be an Elkhart model 40 suction side relief valve provided on the pump system. The relief valve will be plumbed with high-pressure rubber hose, stainless steel connections and terminate within view of the operator's panel.

WATEROUS DISCHARGE RELIEF VALVE

There will be one-(1) Waterous Model 82261-1E, discharge relief valve installed in the pump panel. The relief valve is a two-unit system. A panel mounted pilot valve assembly controls operation of the main relief valve. The pilot valve has two controls; one to select the desired operating pressure, the other to switch the relief valve in or out of operation.

PRIMER

A Waterous Model 2146, 12-volt positive displacement vane primer will be installed with an oil reservoir tank. The electrically driven primer conforms to the standards outlined in the current NFPA Pamphlet. The control will be pump panel mounted to operate the priming valve and start the priming motor. During operation, the primer will automatically lubricate from its own five-quart reservoir.

ENGINE COOLER

The engine cooler will be installed in-line from the discharge side of the pump, and installed in the engine cooling system. There will be a 1/2", quarter turn valve installed thru the pump panel and will be clearly labeled.

PUMP COOLER

The pump will have a 3/8" line installed from the pump discharge, to the water tank to cool the pump during long periods of pumping when water is not being discharged. The pump cooler will be controlled from the pump operators panel by a 3/8" valve consisting of a cast bronze body with 1/4 turn chrome plated bronze ball, reinforced Teflon seals, and blow-out-proof stem rated to 600 PSI.

The valve will be installed thru the pump panel and clearly labeled.

PUMP SHIFT

An air operated pump shift will be installed in the chassis cab to engage the fire pump. Provisions will be made for placing the pump drive system in operation using controls and switches that are clearly identified and within convenient reach of the operator while in the cab.

A green indicator light will be installed on the cab dash and labeled "Pump Engaged."

Where an automatic chassis transmission is provided, a green indicator light in the driving compartment and a green indicator light located at the pump operator's position will be provided and will be energized when both the pump shift has been completed and the chassis transmission is engaged in pump gear.

The light in the driving compartment will be labeled "OK to pump". The light on the pump operator will be positioned adjacent to and preferably above the throttle control and will be labeled "Warning": DO NOT OPEN THROTTLE UNLESS LIGHT IS ON." The green light on the pump operator panel will be energized when the pump is engaged, the transmission is in the drive position, and the parking brake is set.

SEPARATE PUMP MODULE - ALUMINUM

The pump module will be a self-supported structure mounted independently from the body and chassis cab. The pump module will be constructed entirely of extrusions and aluminum plate and will be bolted to the chassis frame rails. The framework will be formed from beveled aluminum alloy extrusions and electrically seam welded both internally and externally at each joint using 5356 aluminum alloy welding wire. The main framework will be constructed of 3.00 x 3.50, 6063-T6 aluminum extrusion. Aluminum angle will be welded such that a recessed Duranodic Aluminum pump panel can be mounted inside the extrusion perimeter. The pump module design must allow normal frame deflection without imposing stress on the pump module structure or side running boards.

TANK FILL

There will be a 2" pump to tank fill line installed, with a 2" inline bronze valve, a 2" high-pressure flexible hose and tested to 1200 PSI. The valve will be controlled at the side pump panel with a chrome push/pull locking "T" handle.

1-1/2" FRONT JUMP LINE

There will be a 1-1/2" front jump line installed at the front bumper. The 2" inline valve will be controlled at the side pump panel with a chrome push/pull locking "T" handle. The plumbing will be flexible high-pressure hose, tested to 1200 PSI, using stainless steel couplings. There will be a 2" NPT x 1-1/2" NST elbow.

A treadplate swivel stop will be installed on the front bumper to ensure that hose does not scuff the cab front.

2-1/2" SINGLE CROSSLAY

One-(1) 2-1/2" crosslay will be installed behind top mount pump panel. The crosslay will hold 200' of 2-1/2" double jacket fire hose.

A 2-1/2" mechanical swivel hose connector will be used in the crosslay to provide access of hose in either direction. Stainless steel rollers with nylon guides will be mounted on the crosslay. Stainless steel scuff plates will be installed around the crosslay openings to protect the painted surfaces.

Crosslay will have one 2-1/2" bronze valve with 2-1/2" high-pressure flexible hose, tested to 1200 PSI, with stainless steel couplings. The crosslay will be controlled with a handle mounted on side mount pump operator's panel. The discharge will also come equipped with a quarter-turn, 3/4" drain valve.

2-1/2" SINGLE DRY CROSSLAY

One-(1) 2-1/2" dry crosslay will be installed behind top mount pump panel. The crosslay will hold 200' of 2-1/2" double jacket fire hose. Stainless steel rollers with nylon guides will be mounted on the crosslay. Stainless steel scuff plates will be installed around the crosslay openings to protect the painted surfaces.

1-3/4" DOUBLE SPEEDLAY

Two-(2) pre-connected speedlay compartments will be provided ahead of the side mount operator's panel each accommodating 200' of 1-3/4" double jacket hose, with stainless steel nylon guided rollers installed at each end, and stainless steel scuff plates around the perimeter of the crosslays protecting the painted surfaces.

A mechanical swivel will be provided for each crosslay allowing deployment of the fire hose in either direction. Two-(2) 2" bronze valves with high-pressure flexible hose, with stainless steel couplings will be provided, and tested to 1200 PSI and push/pull "T" handle controlled from the operator's panel.

Each discharge is equipped with a quarter-turn drain valve.

SPEEDLAY TRAYS (2)

Two-(2) hose trays will be held in place by horizontal bulkheads at each end of the speedlay compartments. The trays will be constructed of 3/16" smooth aluminum. The removable trays will have handles at each end for ease of handling.

2-1/2" LEFT SIDE DISCHARGES (2)

Two 2-1/2" discharges with bronze valves will be located on the left side panel. The valves will be a quarter turn ball type and fixed pivot design to allow easy operation at all pump pressures. The valves will be controlled at the side mount operator's panel with a push/pull controls. The 2-1/2" outlets will be equipped with chrome plated 30-degree elbows terminating with 2-1/2" M-ST threads. Chrome caps and chains will also be supplied. The discharges will also come equipped with a quarter-turn; 3/4" drain valves.

2-1/2" RIGHT SIDE DISCHARGES (2)

Two 2-1/2" discharges with bronze valves will be located on the right side panel. The valves will be a quarter turn ball type and fixed pivot design to allow easy operation at all pump pressures. The valves will be controlled at the side mount operator's panel with a push/pull controls. The 2-1/2" outlets will be equipped with a chrome plated 30-degree elbows terminating with 2-1/2" M-NST threads. Chrome caps and chains will also be supplied. The discharges will also come equipped with a quarter-turn; 3/4" drain valves.

2-1/2" LEFT REAR DISCHARGE

A 2-1/2" left rear discharge will be provided using a 2-1/2" pipe with a chrome 2-1/2" F NPT x 2-1/2" M NST adapter on the outside end. A chrome cap and chain will be provided. A bronze inline 2-1/2" valve will control the discharge with a push/pull handle mounted on the operator's panel. The discharge will come equipped with a quarter-turn, 3/4" drain valve.

2.5" CHROME PLATED 30 DEGREE ELBOW

There will be one (1) chrome plated elbow, Kochek KE30, provided. The elbow will have a 30 degree turn and 2.5" MNST x 2.5" FNST threads.

3" DECK GUN DISCHARGE

A 3" (deck gun) discharge pipe installed above pump compartment. The pipe will terminate with a 3" FNPT x four (4)-bolt flange. A 3" inline valve will control the discharge. The valve will be a quarter turn ball type of fixed pivot design and constructed of bronze. The discharge control handle will be a push/pull handle located on the operator's panel. The valve will be of the Slo-close design so as not to allow the valve to open or close in less than 3 seconds. The discharge will be equipped with a quarter-turn, 3/4" drain valve.

DECK GUN MONITOR

A Task Force "CrossFire" model Safe-Tak 1250 model XFC-42 portable monitor shall be provided with the vehicle. The monitor shall have an extruded aluminum shaper tube, quad stacked tips, and two (2) 2.5" inlet ground mounts provided. A mounting adapter shall be included with the monitor and installed on the discharge flange. The stacked tips shall have a hard anodized finish and sized 1-3/8", 1-1/2", 1-3/4" and 2.0".

AKRON DISCHARGE AND SUCTION VALVES

There will be Akron 8800 series valves used on all discharges and suction inlets. A polished aluminum trim ring will be provided around all inlets and discharges.

SUCTION & DISCHARGE PLUMBING

All suction and discharge lines of 2" or larger, will be constructed of a minimum of Schedule 40 galvanized steel pipe. Where vibration or chassis flexing may damage or loosen piping, the pipe will be equipped with Victaulic or roustabout couplings. The entire discharge and intake piping system, valves, drain cocks and lines, intake and outlet closures excluding the tank fill and tank to pump lines on the tank side of the valves will be designed for 500 PSIG. All suction inlets and discharge outlets will be equipped with National Standard Threads (NST) unless otherwise stated.

"TANK VISION" WATER LEVEL GAUGE

The water level gauge will be a Tank Vision Model WL2000-FER, with nine super bright LED's to show the tank volume. The display will use a two-dimensional, two-element lens to refract the light from the LED's and to provide full 180-degree visibility for the level indications. The gauge will use a pressure transducer installed near the bottom of the water tank to determine the correct volume in the tank.

WHELEN PS TANK STRIPLIGHT

There will be a pair of PS TANK Status Lights, with 96 LED's steady burn green, blue, amber and red. The light provides bright, easy to identify indication of water status. The unit is surface mounted, has low current consumption, fully encapsulated and carries a five (5) year warranty from Whelen. The lights will be mounted per customer requirements, typically one each side on or near the cab. The unit will work in conjunction with the Master on the pump panel.

MASTER GAUGES

One-(1) 4-1/2" master suction and one (1) 4-1/2" master discharge gauge will be pump panel mounted. These compound gauges will be filled with a liquid silicone solution to assure visual reading to within 1% accuracy. This liquid silicone feature eliminates the need of snubber valves and reduces the chance of condensation forming on the inner face of the gauge.

PRESSURE GAUGES

The discharges will have a 2-1/2" white-faced, silicone filled pressure gauge installed on the operator's panel to indicate pressures from 0 to 600 PSI.

All Suction and Pressure gauge bezels will be standard finish.

ENGINE GAUGE PACKAGE

A gauge package will be supplied at the pump operator's panel to monitor the vehicle's engine.

PUMP PANEL TACHOMETER

A 3" tachometer will be mounted on pump panel indicating engine revolutions per minute.

PUMP PANEL VOLTMETER

There will be a 2" diameter voltmeter gauge mounted on the pump panel. The meter will read from 8 volts to 16 volts. The meter will be mounted in a well-lighted area for night operation.

PUMP PANEL ENGINE OIL PRESSURE GAUGE

A 2" weatherproof oil pressure gauge will be mounted on pump panel indicating engine oil pressure.

PUMP PANEL ENGINE WATER TEMPERATURE GAUGE

A 2" weatherproof water temperature gauge will be mounted on the pump panel indicating engine temperature.

OIL PRESSURE/WATER TEMPERATURE ALARMS

There will be an audible alarm, with indicator lights, mounted behind the pump operator's panel. The alarm will be connected to the oil pressure and water temperature gauges to warn of a low oil pressure or high water temperature condition exist.

FOAM PRO 2001 SYSTEM

There will be a fully automatic electronic direct injection foam proportioning system furnished and installed on the apparatus. The system will be capable of Class A foam concentrates and most Class B. The proportioning operation will be based on an accurate direct measurement of water flows with no water flow restriction. System must be capable of delivering accuracy to within 3% of calibrated settings over the advertised operating range. The system will be equipped with a digital electronic control display suitable for installation the pump panel. This proportioning system will meet NFPA standards for foam proportioning systems and the design will have passed testing against SAE automotive reliability standards appropriate for the application. The foam system will be installed in accordance with the manufacturer recommendations. Paddlewheel-type flowmeters will be installed in the discharges specified to be "foam capable". When the use of more than one flowmeter is required, an interface electronics module will be provided to total these flows and send the flow total to the microprocessor in the computer control display.

The system will be equipped with a digital electronic control display. It will be installed on the pump operators panel and enable the pump operator to perform the following control and operation functions:

- Activate the foam system
- Provide push-button control of foam concentrate proportioning rate from .1% to 9.9% in .1% increments
- Show current flow per-minute of water
- Show total amount of water discharged during and after foam, operations are completed
- Show total amount of foam concentrate consumed
- Provide simulated flow for manual operation
- Perform setup and diagnostic functions for the computer control microprocessor
- Flash a "Low Concentrate" warning for two minutes when the foam concentrate tank(s) run low of concentrate
- Flash "No Concentrate" warning if foam concentrate was not changed or foam concentrate was not added to the low tank and shut down foam concentrate pump

The display will have the capabilities when using a manual or electronic dual tank switching system of the following additional functions:

- Displays foam tank selection
- Separate default setting for foam concentrate injection rate
- Total amount of foam concentrate used from selected tank
- Dual foam concentrate foam pumps calibration

The foam system will have a 12-volt electric motor designed for wet and high humidity environments, directly coupled to the (positive displacement) foam concentrate pump with a rated capacity of up to 2.5 gpm at 150 psi with operation pressures up to 400 psi. The system will draw a maximum of 40 amps at 12 VDC. A pump motor electronic driver (mounted at the base of the pump) will receive signals from the computer control display and power the 1/2 hp electric motor directly coupled to the concentrate pump in a variable speed duty cycle to ensure that the correct proportion of concentrate preset by the pump operator is injected into the water stream.

When two types of foam concentrates are to be used, two foam concentrate tanks will be installed and piped to the foam concentrate pump via the electric dual tank valve or the manual dual tank valve.

Full flow check valve will be provided to prevent foam contamination of fire pump and water tank or water contamination of foam tank.
Components of the complete proportioning system will include:

- Operator control and display
- Paddlewheel flow meters
- Pump and electric motor/motor driver
- Wiring harnesses
- Low Level tank switch
- Multi-Flo electronic module (if more than one flowmeter is used)
- Foam tanks
- Electronic dual tank valve or manual dual tank valve (if more than one tank)
- Check valve: Foam injection
- Check valve: Main waterway

An installation and operation manual will be provided for the unit, along with one-(1) year limited warranty by the manufacturer. The system will have passed environmental testing which simulates heavy use on off-road mobile apparatus. Testing will have been conducted in accordance to SAE standards.

FOAM PRO FLOWMETER 2-1/2" TEE MOUNT W/ COUPLING KIT

There will be a paddle wheel style flowmeter mounted in a 2-1/2" NPT pipe tee for mounting in a 2-1/2" discharge line. A groove less Victaulic coupling will be provided for installation of the flowmeter. A water check valve will be installed before the flowmeter and between the water pump and the foam injection point.

FOAM PRO LOW TANK SWITCHES

Two-(2) Foam Pro low level-tank sensor switches will be installed one-(1) in each foam tank connected to the horizontally mounted Display Control Module indicating when a foam cell has approximately five (5) gallons of concentrate left.

FOAM PRO MANUAL DUAL TANK SYSTEM

A manual dual tank system will be provided for switching from foam tank A to foam tank B via a manual valve located at the pump operator's position. The dual tank valve will also provide a clean water flush of the foam concentrate pump upon foam tank change over, to prevent concentrate mixing and possible jelling. The system will automatically read the selected foam concentrate tank low-level sensor and display the appropriate default setup in the operator display control. The valve will be capable of operating pressures up to 500 psi.

FOAM PRO 2-TANK SELECTOR VALVE KIT 1/2" PORT

There will be a 2-tank selector valve kit for the 2000 Series Foam Pro. This selector kit has 1/2" ports. This kit will include two (2), three-way pilot operated solenoid valves for each foam tank, one (1) two-way pilot operated solenoid valve for the water flush line.

FOAM PRO PLACARD

There will be a placard installed on the pump panel, a schematic of the foam pro system which has been installed.

FOAM TANKS (2)

There will be two (2) twenty (20) gallon foam tanks designed as an integral part of the water tank. The foam cells will have a separate fill tower and include a pressure/ vacuum vent (PVV). The tank will be configured with appropriate inlets and outlets for the specified foam application.

"TANK VISION" FOAM LEVEL GAUGES

There will be two (2) Tank Vision Foam Gauges, Models WL2600-FER & WL2700-FER. They have nine super bright LED's to show the tank volume. The display will use a two dimensional, two-element lens to refract the light from the LED's and to provide full 180-degree visibility for the level indications. The gauge will use a pressure transducer installed near the bottom of the foam tank to determine the correct volume in the tank. One will be labeled "Foam A" and the other will be labeled "Foam B". A tank vent is provided with the system.

FOAM PROPORTIONING SYSTEMS - NFPA TEST

NFPA 1901 PERFORMANCE REQUIREMENTS

The proportioning system will be capable of proportioning foam concentrate in accordance with the foam concentrate manufacturer's recommendation for the type of foam concentrate used in the system over the system's design range of flow and pressure. The foam proportioning systems water flow characteristics and the range of proportioning ratios will be specified.

The foam system will comply with NFPA 1901 Chapter 17.0 as it relates to the specified system.

FOAM TANK PIPING

The foam supply line will be non-collapsible. There will be a means provided to prevent water backflow in to the foam proportioning system and storage tank(s).

Either a filter or strainer provided on the foam concentrate supply side of the foam proportioning to prevent any debris that may affect the operation of the foam proportioning system from entering the system. The strainer assembly will consist of a removable straining element, housing, and retainer. The strainer assembly will allow full flow capacity of the foam supply line.

FLUSHING

Foam concentrate system flush line(s) will be provided as required by the foam system manufacturer. The design will incorporate a means to prevent water backflow into the concentrate tank or water tank during the flushing operation. Where the foam proportioning system is connected to more than one (1) foam storage tank, provisions will be made to flush all common lines to avoid contamination of dissimilar foam concentrates.

CONTROLS FOR FOAM SYSTEM

The foam proportioning system operation controls will be located at or near the pump operator's position and will be clearly labeled.

All foam-proportioning systems that require flushing will provide controls, which enable the operator to flush the system in accordance with the foam manufacturer's instructions.

Foam proportioning systems that incorporate foam concentrate metering valves will have each metering valve calibrated to indicate the rate(s) of flow of the foam concentrate proportioning available as determined by the design of the system.

Foam proportioning systems that incorporate automatic proportioning features will be equipped with controls, which enable the operator to isolate the automatic feature and operate the system in a manual mode.

NAMEPLATE, LABELS, INSTRUCTION SPECIFICATIONS

There will be a nameplate provided that is clearly marked with the identification and function of each control gauge and indicator related to the foam proportioning system.

There will be a label provided on the operator's panel that identifies the type(s) of foam concentrate(s) the system is designed to use. This label will state the minimum/maximum foam-proportioning rate at the minimum/maximum foam proportioning rated system flow and pressure.

Foam proportioning system instruction plate will be provided. This includes a minimum piping schematic of the system and basic operating instructions.

Two (2) copies of an operations and maintenance manual will be provided. These manuals will include a complete diagram of the system, along with operating instructions and details outlining all recommended maintenance procedures.

FOAM PROPORTIONING SYSTEM TESTING

The apparatus manufacturer will test the accuracy of the foam proportioning system prior to delivery of the apparatus.

If the manufacturer's rated proportioning ratio is below 3%, the foam system will proportion foam concentrate within 0% /+40% of the manufacturer's rated proportioning ratio across the manufacturer stated range of water flow and pressure.

If the manufacturer's rated proportioning ratio is above 3%, the foam system will proportion foam concentrate within 0% /+40% of the manufacturer's rated proportioning ratio or 1 percentage point, whichever is less across the manufacturer's stated range of water flow and pressure.

BOOSTER TANK - POLYPROPYLENE

The booster tank will have a capacity of 750 U.S. Gallons complete with a Lifetime Warranty. The tank manufacturer will mark the tank and furnish notice that indicates proof of warranty. The purpose of the markings and notice is to inform department personnel who store, stock, or use the tank that the unit is under warranty. The markings indicate the substance and duration of the warranty. It also includes whom to notify if the tank is found to be defective.

CONSTRUCTION

The tank will be "T" shaped and constructed of 1/2" thick polypropylene sheet stock. This material will be a non-corrosive stress relieved thermoplastic, natural in color and UV stabilized for maximum protection.

The booster tank will be of a specified configuration and is designed to be completely independent of the body and compartments. All joints and seams are nitrogen welded and tested for maximum strength. The top of the tank is fitted with removable lifting eyes designed with a 3 to 1 safety factor to facilitate easy removable. The transverse swash partitions will be manufactured of 3/8" polypropylene and extend from approximately 4" off the floor to just under the cover. The longitudinal swash partitions will be constructed of 3/8" polypropylene and extend from the floor of the tank through the cover to allow for positive welding and maximum integrity. All partitions will be equipped with vent and air holes to permit movement of air and water between compartments. The partitions will be designed to provide maximum water flow. All swash partitions interlock with one another and are welded to each other as well as to the walls of the tank.

FILL TOWER AND COVER

The tank will have a combination vent and manual fill tower. The fill tower will be constructed of 1/2" polypropylene and will be a minimum dimension of 12" x 12" outer perimeter. The tower will be located in the left front corner of the tank unless otherwise specified by the purchaser. The tower will have a 1/4" thick removable polypropylene screen and a polypropylene hinged-type cover. Inside the fill tower, approximately 4" down from the top will be fastened a combination vent / overflow pipe. The vent overflow will be a minimum of schedule 40 polypropylene pipe with a minimum ID of 4" that is designed to run through the tank, and will be piped behind the rear wheels to maximize traction.

The tank cover will be constructed of 1/2" thick polypropylene, and UV stabilized, to incorporate a multi three-piece locking design, which allows for individual removal and inspection if necessary. The tank cover will be recessed 3/8" from the top of the tank and will be welded to both sides and longitudinal partitions for maximum rigidity. Each one of the covers will have hold downs consisting of 2" polypropylene dowels spaced a maximum of 30" apart. These dowels will extend through the covers and will assist in keeping the covers rigid under fast filling conditions. A minimum of two (2) lifting dowels will be drilled and tapped 1/2" x 13" to accommodate the lifting eyes.

SUMP

There will be one (1) sump standard per tank. The sump will be constructed of 1/2" polypropylene and be located in the left front quarter of the tank, unless specified otherwise. On all tanks that require a front suction, a 3" schedule 40 polypropylene pipe will be installed that will incorporate a dip tube from the front of the tank to the sump location. The sump will have a minimum 3" NPT threaded outlet on the bottom for a drain plug. This will be used as a combination clean-out and drain. All tanks will have an anti-swirl plate located approximately 2" above the sump.

OUTLETS

There will be two (2) standard tank outlets: one for the tank-to-pump suction line, which will be a minimum of 3" NPT coupling; and, one for a tank fill line, which will be a minimum of 1" NPT coupling. All tank fill couplings will be backed with flow deflectors to break up the stream of water entering the tank, and be capable of withstanding sustained fill rates of up to 1,000 Gpm. The addition of rear suction fittings, nurse valve fittings, dump valve fittings, and through tank sleeves to accommodate rear discharge piping must be specified. All auxiliary outlets and inlets must meet all NFPA 1900 guidelines in effect at the time of manufacture.

MOUNTING

The tank will rest on the body cross members in conjunction with such additional cross members, spaced at a distance that would not allow for more than 530 square inches of unsupported area under the tank floor. In cases where overall height of the tank exceeds 40 inches, cross member spacing must be decreased to allow for not more than 400 square inches of unsupported area. The tank must be isolated from the cross members through the use of hard rubber strips with, a minimum thickness and width dimension of .250" x 2" and a minimum Rockwell Hardness of 60 durometer. The tank will be captured front and rear as well as side-to-side to prevent the tank from shifting during vehicle operation. The tank will sit cradle mounted using four (4) corner angles of 4" x 4" x .250" thickness x 6" high welded directly to the body cross members. The entire perimeter of the bottom of the tank will be supported. Although the tank is designed on the free-floating suspension principle, it will be required that the tank have hold down restraints to minimize movement during vehicle operation. These restraints will be mounted to the side walls of the hose bed and extend down so that they rest approximately 1/2" above the top of the tank. The foot of the restraint does not directly contact the top of the tank. Hosebed floors will be designed so that the floor slat supports extend the full width of the hose body. The floor is not permitted to drop off the edge of the tank or in any way come in contact with the individual covers where punctures may occur. The flooring will be capable of supporting up to 200 lbs per square foot and will be evenly distributed whenever possible. The tank will be completely removable without disturbing or dismantling the apparatus structure.

NFPA WATER TANK SIZE CERTIFICATION

The manufacturer will certify the capacity of the water tank prior to the delivery of the apparatus. This capacity will be recorded on the manufacturer's record of construction and the certification will be provided when the apparatus is delivered.

LIFETIME POLY TANK WARRANTY

The poly tank manufacturer warrants each tank to be free from manufacturing defects in material and workmanship for the service life of the original vehicle (vehicle must be actively used in fire suppression). The warrant is transferable, with written approval of the manufacturer. Each tank is inspected and tested for leaks prior to leaving the manufacturing facility. The tank will be installed in the vehicle in accordance to the manufacture's guidelines.

There are no warranties, expressed or implied, which extend beyond the description of the face hereof. There is no expressed or implied warranty of merchantability or a warranty of fitness for a particular purpose. Additional, this warranty is in lieu of all other obligations or liabilities on the part of the Manufacturer.

102" WIDE APPARATUS BODY

The apparatus body and subframe will be constructed entirely of marine grade aluminum plate and extrusions.

SUBFRAME

The main body support crossmember extrusions will be 3" x 4" 6061T6 aluminum alloy, double "I" beam with a wall thickness of 7/16" (.438"). These crossmembers will extend the full width of the body to support the compartment framing. The crossmembers will be welded to a 3/4" (.750") x 3" solid aluminum, 6061T6 aluminum (alloy frame rail) extrusion. The frame rail extrusion will be shaped in contour with the chassis frame rails. The frame rail extrusion will be mounted over a 1/2" (.5") thickness, reinforced rubber cushion to isolate the aluminum subframe from the chassis steel frame rails. The apparatus body structure will be securely fastened to the chassis frame rails with a minimum of six (6) 5/8" (.625") crossmember OD, steel U-bolts. The main body support crossmember will have a gusset above and below each crossmember. The gussets will be constructed of 2.0" x 4.0" 6063T6 aluminum alloy extrusion with a .190" wall thickness. The gussets will be continuously welded with 5356 aluminum alloy welding wire to add support to the body sidewalls. The main body supports and the longitudinal double "I" beam supports will have a "C" shaped rubber tank cushion installed on the top of each member. This rubber extrusion will conform to the shape of the double "I" beam extrusion to keep the tank cushion in place. This method is used to prevent damage to the tank.

Absolutely no pop-rivets, screws or any other hardware will be used to hold the rubber tank cushion in place.

BODY CONSTRUCTION

The complete apparatus body structure will be an all welded construction and be free from nuts, bolts and other fasteners. Upon completion of the weldments, the body will be completely sanded and deburred for removal of all sharp edges.

The body framework will be formed from beveled aluminum alloy extrusions and electrically seam welded at each joint using 5356 aluminum alloy welding wire. Body sides will be formed from 5052 H-32 (marine grade) smooth aluminum plates. The horizontal surfaces above the compartment tops will be constructed from aluminum treadplate.

The horizontal and vertical frame member extrusions will be 2.0" x 4.0" with a .190" wall thickness. The extrusion will be made from 6063T6 aluminum alloy. This extrusion will have .190" outside radius corners. The longitudinal frame member, below the lower compartments will be a 2.0" x 4.0" 6063T6 aluminum alloy extrusion with .190" radius corners. Each body corner will be a 3.5" x 9.75" 6063T6 extruded aluminum section with .210" wall thickness, and will be welded as an integral part of the body. This extrusion will have a 1" corner radius.

The wheel well will be constructed from 2" x 4" x .190" wall thickness. The extrusion will be made from 6063T6 aluminum alloy and have .190" outside radius corners. The extrusion will be slotted the full length to permit an internal fit of 1/8" (.125") aluminum treadplate panels. The wheel well liners will be constructed of 3003 H-14 smooth aluminum plates. They will be bolted in place for ease of maintenance. The wheel well fenderettes will be constructed of #304 Stainless steel with a #7 polished finish.

A deflection shield will be mounted to the body subframe to keep road debris from entering the water tank area.

The hosebed sides will be constructed of 3/16" (.1875") 5052 H-32 (marine grade) smooth aluminum plate welded to the extruded framework. There will be a 3" x 3.5" 6063T6 aluminum extrusion with .190" wall thickness running the entire length of the hosebed at the top for structural rigidity. The hosebed decking will be constructed from anodized aluminum extrusions. The extrusions will be 3/4" (.750") x 8.125" and have 3/4" (.750") x 3.00" hat channel attached to the underside to form a one-piece grid. The entire deck will be removable, in one piece, to allow ease of serviceability to the tank. The hosebed will include an extrusion across the front and rear of the compartment for the installation of adjustable hosebed dividers.

There will be slanted beavertails provided at the rear of the body. The beavertails will be constructed of 2" x 2" x .190" thickness, 6063T6 aluminum alloy extrusions with .190" radius corners. There will be a removable panel on either side of the extrusion that is constructed of 1/8" (.125") aluminum treadplate.

COMPARTMENT CONSTRUCTION

The compartment sidewalls will be of one-piece construction. The walls will be formed from 3/16"(.1875") 5052 H-32 (marine grade) smooth aluminum plate. All compartment floors will be formed from 3/16"(.1875") aluminum treadplate. The floors will be welded in place with a continuous weld all around the perimeter to insure maximum strength.

The external compartment tops will be constructed of 1/8" (.125") aluminum treadplate. The tops will have a formed edge, which serves as a drip rail for the compartments below. The compartment tops will be secured with stainless steel screws to allow for ease of removal for access to the bodies wiring harnesses.

The compartment seams will be sealed with permanent pliable silicone caulking.

Each compartment will be vented through a 3"W x 15"H louver that is machined stamped in a panel located in each body corner extrusion. The panel will be removable to provide access to service wiring and other mounted components.

COMPARTMENTATION

LEFT SIDE

L1
There will be one (1) left front compartment installed ahead of the rear axle. This compartment will have one (1) roll-up door. The interior compartment dimensions will be approximately 44"W x 72"H x 28"D in the lower compartment and 15"D in the upper compartment. The compartment will have a useable door opening of approximately 41"W x 63"H

L2
There will be one (1) compartment installed above the wheel well. This compartment will have one (1) roll-up door. The interior compartment dimensions will be approximately 58"W x 40"H x 15"D. The compartment will have a useable door opening of approximately 55"W x 31"H.

L3
There will be one (1) left rear compartment installed behind the rear axle. This compartment will have one (1) roll-up door. The interior dimensions will be approximately 49"W x 72"H x transverse in the lower compartment and 15"D in the upper compartment. The compartment will have a useable door opening of approximately 46"W x 63"H.

RIGHT SIDE

R1
There will be one (1) right front compartment installed ahead of the rear axle. This compartment will have one (1) roll-up door. The interior compartment dimensions will be approximately 44"W x 72"H x 28"D in the lower compartment and 15"D in the upper compartment. The compartment will have a useable door opening of approximately 41"W x 63"H

R2
There will be one (1) compartment installed above the wheel well. This compartment will have one (1) roll-up door. The interior compartment dimensions will be approximately 58"W x 40"H x 15"D. The compartment will have a useable door opening of approximately 55"W x 31"H.

R3
There will be one (1) right rear compartment installed behind the rear axle. This compartment will have one (1) roll-up door. The interior dimensions will be approximately 49"W x 72"H x transverse in the lower compartment and 15"D in the upper compartment. The compartment will have a useable door opening of approximately 46"W x 63"H.

CENTER REAR

B1
There will be one (1) compartment installed at the center rear of the apparatus. This compartment will have a roll up door. The compartment will have a useable door opening of approximately 43"W x FULL HEIGHT.

COMPARTMENT DOORS

Robinson roll-up doors will be installed on ALL compartments of this apparatus.

Slats are to double-wall (box frame) aluminum extrusion. Exterior surfaces are to be flat. Interior surfaces are to be concave to prevent loose equipment from jamming doors. The slats must be anodized to eliminate oxidation. The slats are to have inner-locking end shoes on every slat secured by a Punch-Dimple process. The slats are to have interlocking joints with a folding locking flange. Between each slat will be a PVC/vinyl inner seal to prevent any metal-to-metal contact.

The track will be one-piece aluminum, which has an attaching flange and finishing flange incorporated into its design, which provides a finish look to installation without additional trim or caulking. The track is to have a replaceable side seal. The side seal will prevent water and dust intrusion into the compartment.

There will be an aluminum drip rail above each compartment door with a built in replaceable wiper seal.

Each roll up door will have a counter balance to assist in lifting and eliminate the risk of accidental closing.

A full width lift bar, operable by one hand, will be used as a positive latch device for securing each individual compartment door in the closed position.

The outside door will have a natural finish.

There will be an anodized aluminum sill plate installed over the compartment door.

GROUND LADDER/PIKE POLE STORAGE

The apparatus will be equipped with a rear, ladder access, storage compartment configured through the center of the water tank. This storage area will be completely enclosed and designed to protect the contents of the ladder compartment.

The rectangular ladder tunnel will be constructed entirely from a high impact polypropylene material. The top and sidewalls will be constructed from 3/4" (.750) material while the floor is constructed from 1" thick material. All four sides will be internally seam welded to the water tanks structure.

The equipment storage compartment will be constructed of 3/16" (.1875") 5052-H52 marine grade aluminum and designed to accommodate the NFPA required equipment. The compartment will house one (1) 24' extension ladder, one (1) 14' roof ladder, one (1) 10' folding ladder and up to four (4) pike poles. The compartment will be supported externally both fore and aft and will not touch the water tank sleeve at any point. The complete assembly will be easily removable in the event that service to the water tank becomes necessary.

Individual storage compartments constructed from the same high-grade material as the outer structure will be supplied. All partitioned floor areas will be overlaid with 1/4" PVC flat stock to facilitate the removal of each component.

Individual pike pole tubes will be manufactured from aluminum tubing and will be designed with a slot securing each pike pole in place.

A horizontally hinged, lift up door, located at the rear of the apparatus will be used to access the storage compartment. The outer skin will be constructed of 3/16" (.1875") aluminum treadplate with the inner pan stitch welded in place from 1/8" (.125") smooth aluminum plate. There will be 1/4" (.250) holes located in the lower corners of the inside door pans for moisture drainage. The door will have a closed cell, neoprene rubber gasket installed around the perimeter of the door for the removal of excess water.

The door will have one (1) D-paddle handle with rotary latch mechanism, and pneumatic door stay device. The door striker will be offset to improve the storing and removal of equipment. The door will have a continuous stainless steel piano hinge bolted to the body and door with stainless steel hardware.

To insure reliability and the ability to construct this type of storage system, the body manufacturer and the manufacturer of the water tank will submit a rear view line drawing and a minimum list of 50 units with the ladder storage configuration in service. Failure to provide this information with the bid will be reasonable cause for the rejection of the bid.

RUNNING BOARDS AND STEPS

All running board and step surfaces will be in compliant with the current version of NFPA 1901.

PUMP PANEL

The operator's controls and gauges will be mounted on a pump panel constructed of .125" black anodized, non-glare aluminum. No vinyl coverings will be acceptable as these surfaces are susceptible to rough usage and may cause the covering to tear.

The operator's master gauge panel will have a vertical stainless steel hinge installed at the left side of the panel with a latch at the right to provide access to the gauges for servicing.

The upper portion of the right side pump panel will have hinged double doors for access to the pump compartment and primer reservoir. The doors will be constructed of .125" aluminum treadplate.

The controls and instruments will be provided and installed as a group at the pump panel. The central midpoint or centerline of any valve control will be no more than 72" vertically above the ground or platform that is designed to serve as the operator's standing position. These instruments will be placed to keep the pump operator as far as practical from all discharge and intake connections and in a location where they are readily visible and operationally functional while the operator remains stationary.

VERTICAL LOAD TEST - BODY

The fire body will exceed a vertical load testing. The vertical load test to the fire body will follow the same strict and detailed requirements of the Economic Commission for Europe Structural Standard, ECE-29R as applied to the cab.

The fire body will be placed under a vertical load test to show structural integrity. There will be 65,979 lbs (29.53 metric tons) applied to the fire body. There will be no structure failures to the body and body compartments.

A complete photographic, video, data, and dimensional record of these tests will be available and placed on record for customer evaluations.

FULL HEIGHT REAR COMPARTMENT

The rear compartment of the apparatus will have a rear door configuration that extends from the lower compartment to below the hose bed. The exact dimensions and storage capacity is completely described in the "Compartment" section of the specification.

WHEEL WELL AIR BOTTLE COMPARTMENTS (4)

There will be four (4) air bottle compartments located in the rear wheel well two (2) on each side. The compartments will be fabricated from 1/8" (.125") smooth aluminum. The aluminum rolled air bottle tube will be supported at the opening by seam welding the tube to the wheel well. The bottom of the tube is also to be supported to eliminate breakage from vibration. The tubes are vented to facilitate moisture drainage. The compartment doors will be a cast aluminum door with a positive mechanical latch. The bottom of the compartments will be lined with a material to protect the air bottle finish.

ROLL UP DOOR FINISH

All roll-up doors supplied on the apparatus will have a Satin finish.

BODY TRIM

The standard body trim will include the following:

- There will be 1/8" (.125") aluminum treadplate installed over all side compartment tops to provide a drip rail over the compartment door openings.
- A drip rail will be located over each compartment door. This drip rail will form a lip over the exterior door pans to prevent water from running into a compartment.
- The vertical rear face of the body will be covered with aluminum treadplate.
- Two (2) handrails will be located on the rear beavertails; one handrail per beavertail. Each handrail will be constructed of 1-1/4" ribbed aluminum tubing, with chrome end stanchions. Each handrail will be sufficient in length to meet all standard requirements.
- Two (2) stanchions will be mounted at the rear of the apparatus hosebed, one (1) each side. The stanchions will be 11"L x 3.75"W and manufactured out of polished cast aluminum. Stainless steel scuff plates will be installed in the hosebed area to prevent deploying hose from damaged on stanchion supports. The stanchions will provide mounting positions for the Zone C warning lights and additional hosebed lighting. All wiring for the upper rear lighting will be concealed inside the stanchions.

FUEL FILL - RECESSED WITH DOOR

There will be a cast aluminum recessed fuel fill assembly with a non-locking door mounted on the left side of the apparatus body. The fuel fill assembly will be equipped with a fuel fill cap, retention ring and a CPI cast aluminum door. The assembly will be properly labeled "DIESEL FUEL ONLY".

ALUMINUM RUBRAIL

There will be an aluminum rubrail installed on both sides of the lower body compartments. The rubrail will be constructed from "C" channel extrusion. The aluminum rubrail will be bolted in place with stainless steel bolts, and spaced from the fire body to provide body protection. The solid rubrail will serve as protection to the side doors when encountering close objects. Treadplate rubrails or welded on will not be acceptable.

SLOTTED RUNNING BOARDS

The running boards will be constructed from an anodized aluminum extrusion. This extrusion will be slotted punched and raised to provide superior traction during wet and cold weather operations.
Each running board will bolt on with stainless steel nuts and bolts for removal and replacement. The running boards will have a 1/4" space from the side of the body to allow run off of water and debris.

SLOTTED REAR STEP

The rear step will be constructed with an anodized aluminum extrusion. This extrusion will be slotted punched and raised to provide superior traction during wet and cold weather operations. The rear step will be a two-piece design. Each section of the rear step will bolt on with stainless steel nuts and bolts for replacement. The rear step will have a space of approximately 1/4" from the rear of the body to allow water run off.

All running board and step surfaces will comply with NFPA 1901.

INTERMEDIATE HANDRAIL

There will be an intermediate handrail supplied and installed on the apparatus. The handrail will be made out of 1-1/4" ribbed aluminum. The handrail will be mounted below the hose bed and above the center rear compartment. The handrail will be mounted with chrome plated end stanchions.

SPEEDLAY COVERS

There will be two-(2) hypalon covers provided with the apparatus each side.

ALUMINUM/HYPALON CROSSLAY COVER

There will be an aluminum cover for the triple crosslay hose bed. The cover will be constructed of 1/8" (.125") aluminum diamond plate and will be hinged with stainless steel piano hinge. The cover will open from the center of the body and swing forward to the front of the body. The cover will have chrome handles at the ends of the cover, and secured with two (2) chrome hook latches.

The hypalon end flaps will be secured at the bottom using Velcro.

The covers will completely protect the hose and prevent the hose from inadvertently deploying during normal operation. The cover will meet the TIA 03-1 NFPA requirement.

The end flaps will be red in color.

ALUMINUM/HYPALON HOSE BED COVER

A 1/8" (.125") aluminum diamond plate hose bed cover will be provided. Cover will be two (2) door type with continuous stainless steel hinge along each side. Hosebed cover doors will have assist and door hold open springs. The cover will have chrome handles at the ends of the cover to assist in raising.

Two (2) Hypalon end covers will be provided for each diamond plate cover. The covers will be constructed of 16 oz. heavy-duty, fire retardant (criss-crossed) reinforced nylon.

The hypalon end flaps will be secured at the bottom using push pins.

The covers will completely protect the hose and prevent the hose from inadvertently deploying during normal operation. The cover will meet the TIA 03-1 NFPA requirement.

The cover and end flaps will be red in color.

HOSE BED DIVIDER

One (1) hose bed divider will be manufactured from 1/4" (.250") smooth aluminum plate with an extruded aluminum base welded to the bottom. The divider will have an extruded track to slide in to allow the hose bed to adjust for different hose capacities. One end of the divider will have a 3" radius corner. The divider will be sanded to prevent damage to hose.

HOSE BED CAPACITY

Quantity	Size of Hose	Brand Name of Hose
1200'	5"	LDH
800'	2.5"	DJ

CHROME FOLDING STEPS (2)

There will be two (2) large chrome-folding steps with a minimum surface area of thirty-five (35) square inches. The step will be mounted one-(1) on the front face of the forward compartment, or as directed by the customer.

REAR STEP/ STEP LIGHTS (3)

There will be three (3) rear lighted step(s) installed on the apparatus. The step(s) will be Cast Products and have a minimum of thirty-five (35) square inches of surface area to conform to the NFPA 1901 standards. The step(s) will include a 12-volt incandescent light to illuminate the area below.

ELECTRICAL SYSTEM

BODY ELECTRICAL

The body electrical system will be designed as an integrated electrical package specifically engineered for fire apparatus application. The integrated electrical system will be comprised of central power distribution panels, which interface with the body and chassis through an engineered harness system.

DISTRIBUTION PANELS

The electrical distribution panel and circuits must be housed in a sealed enclosure. All circuit entry points to the distribution panel must be made through locking bulkhead style connectors, which are sealed at the panel wall by formed gasket. The distribution panel will incorporate a sealed bulkhead style stud for the main power source connection to the internal circuits. A grounding stud will be incorporated onto the panel enclosure.

All internal wire end terminals, including locking bulkhead connectors, will be mechanically affixed to the wire ends by machine terminal crimping presses. No hand-crimped terminals will be acceptable.

All internal splices will be ultrasonically welded connections - no butt style connections will be acceptable in the main body harness. All internal wiring will be of the high temperature GXL type wire and will be protected by wiring duct wherever possible.

The electrical distribution panel will consist of seven-(7) power distribution relays. The power distribution relays will be replaceable, SPDT automotive style, rated at a minimum of 30 amperes.
The polarity of the (power distribution) relay circuit is selectable and can be set for either positive or ground input. Each relay will be protected by an appropriately rated circuit breaker.

Diagnostic LED's will be present to indicate when the switch input is activated, the polarity of the switch activation signal, power to the relay buss, and power through the relay when activated.

The power distribution relays will incorporate separate inputs, which are able to accept outputs from a load management system. The load management inputs must allow for the addition of a load management system before, during, or after the time of delivery without requiring a rewiring of the existing distribution panel circuits. The input switch diagnostic LED's will be configured so that the indicator is controlled by the load management inputs.

Connections to the distribution panel will utilize spring loaded "cage clamp" style connectors (Wago or equivalent) wherever possible. Screw clamp type connections are not acceptable.

The electrical distribution panel will incorporate a pump interlock module. The module will control the interlock circuit to meet the current NFPA pump engagement requirements. Diagnostic LED's will be present to indicate the interlock signals of Park-Brake, Neutral, Pump-In-Gear and O.K.-To-Pump circuits.

The Pump interlock module will be programmable to accept the specific input polarity of the interlock signals to minimize the use of redundant inverting circuits.

The distribution panel will also contain circuit's ancillary to the required DOT signals and other body functions.

The complete body electrical system will be 100% documented and contain independent circuit diagrams with point to point wiring information, as will as a general component diagram attached to the inside cover of the distribution panel enclosure.
The body electrical panel will be capable of being completely disconnected and fully tested by a computerized circuit analyzer. A computer printout of the tested enclosure will be provided upon request.

All electrical equipment switches will be mounted on a switch panel mounted in the cab convenient to the driver. Light switches will be of the rocker type with integral indicator light to show when lights are energized. All switches will be appropriately identified.

12-VOLT TESTING

The apparatus low voltage system will be tested and certified. A copy of certification will be provided to the purchaser with the apparatus.

- RESERVE CAPACITY TEST
- The unit will be run until all engines, engine compartment temperatures are stabilized, and the battery system is fully charged. The engine will be shut off and the minimum continuous electrical load be activated for ten-(10) minutes. All electrical loads will be shutoff after ten-(10) minutes and the battery system will then be capable of restarting the engine.
- ALTERNATOR PERFORMANCE TEST AT IDLE
- Minimum continuous electrical loads will be activated while the unit is at idle speed.
- ALTERNATOR PERFORMANCE TEST AT FULL LOAD
- The total continuous electrical load will be activated with the engine running up to the manufacturer's governed speed. The test duration will be a minimum of two-(2) hours. Activation of the load management system will be permitted during the test. If however, an alarm is sounded by excessive battery discharge as detected by the system or a system voltage of less than 11.8 volts DC for a 12-volt nominal system for more than 120 seconds, will be considered a test failure.
- LOW VOLTAGE ALARM TEST
- The engine will be shut off and the total continuous electrical load will be activated and continue to be applied until the excessive battery discharge alarm activates. The test will be considered a failure if the alarm has not sounded within 140 seconds after the voltage drops to 11.8 volts.

TOTAL SYSTEM MANAGER - CLASS 1

The apparatus will be equipped with a Class 1 Total System Manager (TSM) for performing electrical load management. The TSM will have two-(2) modes of operation, a "Calling Right of Way" mode, and a "Blocking Right of Way" mode. The "Blocking Right of Way" mode is activated only when the park brake is set. Load shedding may occur "only" in the "Blocking Right of Way" mode and when the battery voltage level reaches your programmed shed level.

Outputs 1-12 will be independently programmable to sequence on with the ignition or master warning switch. Outputs 1-12 will also be programmable to be activated during the "Calling Right of Way" mode and or the "Blocking Right of Way" mode. Output 13 is user configurable output and will be programmable for activating between 10.5 and 15 volts. Output 14 will provide a low voltage warning for an isolated battery. Output 15 will be designated to activate a fast idle system. Output 16 will provide a low voltage alarm that activates at the NFPA required 11.8 volts.

The Total System Manager will have a digital display to indicate system voltage in normal operation mode and indicate the output configuration during programmable mode. The Total System Manager will be protected against reverse polarity and shorted outputs, and be enclosed in a metal enclosure to enhance EMR/RFI protection.

EMI/RFI PROTECTION

The apparatus will be manufactured to incorporate the latest designs in the electrical system with components that are state of the art to insure electromagnetic interference (EMI) and radio frequency interference (RFI) emissions are suppressed at the source.

The apparatus will have the ability to operate in typical fire and rescue situations with no adverse effects from EMI and/or RFI.

The apparatus will utilize components that are fully protected and wiring that utilizes shielding and loop backgrounds where required to control EMI/RFI susceptibility. The apparatus will be bonded through ground straps. Relays and solenoids that are suspect to generating spurious electromagnetic radiation are diode and/or resistor protected to prevent transient voltage spikes.

In order to prevent the radio frequency interference completely the purchaser will be requested to provide a listing of the type, power output, and frequencies of all radio and bio medical equipment that is proposed to be used on the apparatus.

LEFT SIDE PUMP PANEL LIGHT

Three (3) individual Weldon Model 2025-7100-30 light fixtures with on/off switch will be mounted under a polished aluminum light shield extrusion. The lights will be mounted at the upper portion of the pump panel to give the best light for night operations. The switch will be located on the operator's panel for easy access.

RIGHT SIDE PUMP PANEL LIGHT

Three (3) individual Weldon Model 2025-7100-30 light fixtures with on/off switch will be mounted under a polished aluminum light shield extrusion. The lights will be mounted at the upper portion of the pump panel to give the best light for night operations. The switch will be located on the operator's panel for easy access.

LIGHTBAR

A Whelen model FN72VLED LED lightbar will be mounted on the cab roof. The lightbar will measure 72" in length and positioned as far forward as possible. The lightbar will have four-(4) corner Red Linear 12's and four-(4) front Linear 8's (2 Red / 2 White).

The lights will be activated by a single emergency light switch located on the master light switch panel in the cab.

The lightbar will meet NFPA 1901 edition as configured.

SIDE LOWER LIGHTS

There will be three (3) pair of Whelen Model 60R00FRR LED lights and mount provided. These mid ship optical warning devices will be mounted on both the left and right lower sides of the apparatus with the optical center of the device at a distance of 18" to 62" above ground not to exceed 25' between optical warning devices. The color will be red.

REAR LOWER LIGHTS

There will be a pair of Whelen Model 60R00FRR LED lights and mount provided. These lights will be mounted on the rear face of the unit directly above the taillight assembly, one (1) each side of the apparatus, as recommended by NFPA. The color will be Red.

REAR BEACONS

There will be one (1) pair Whelen model B6TMRR1P LED lights provided with the apparatus. This light will include a red directional Linear LED light in the lower section, and a rotating beacon in the upper section. The lights will be housed in a single polished aluminum fixture. The lens color will be Red.

CLEARANCE LIGHTS AND REFLECTORS

Clearance lights and reflectors will be Truck Lite LED lights, which include (2) red marker lights, (4) red rectangular reflectors, (2) amber rectangular reflectors and (1) red three light cluster recessed in the rear step.

WHELEN STOP, TURN (LED) AND BACK-UP (HALOGEN) LIGHTS

Stop, turn, and backup lights will be Whelen 600 Series, individual fixtures. Fixtures will be mounted on each rear face of the body recessed in model TH64, highly polished, aluminum trim ring. The red stop (LED) light will be model 60R00BRR, turn light will be a model 60A00TAR amber (LED) type with directional arrow, and the backup light will be model 60J000CU clear halogen light type.

LICENSE PLATE LIGHT

Chrome license plate light will be installed on the rear of the vehicle.

UNITY DECK LIGHTS

Two-(2) 6" chrome plated deck lights with swivel mount will be installed one-(1) each side at the rear of the apparatus. Each light will be manually operated and switched on and off at the light. One-(1) halogen spot light bulb with 160,000-candlepower will be supplied. One-(1) halogen flood light bulb with a 6,000 candlepower will be supplied.

PUMP COMPARTMENT LIGHT

There will be one (1) compartment light with switch will be installed to illuminate the pump area for service.

CAB MAP LIGHT

One (1) cab map light will be provided. The light will be of the gooseneck type and operated from the light. The bulb and lens will be clear.

SIREN - EQ2B

There will be one-(1) Federal model EQ2B electronic siren provided with attached noise canceling microphone. The operating modes will include Q siren, wail, Q-yelp, Q-brake PA/Radio rebroadcast and digitally recorded air horn. The siren will be operated from control panel in cab. The unit will include one BP200 watt speaker to achieve a sound output level that meets Class "A" requirements with square stainless steel "EF" style grill. The speaker will be installed outboard thru the front bumper passenger's side.

The activation switch will be wired thru the chassis park brake and operate in the "Response Mode" only.

SIREN FOOT SWITCHES

There will be two floor mounted foot switches to operate the siren. The switches will be mounted one (1) on the driver's side in the cab and one (1) mounted on the officer's side in the cab. The switches will be mounted as high and as far outboard as possible.

COMPARTMENT LIGHTS

Each compartment will have one (1) Truck Lite Model 80351, 5" diameter single bulb compartment light that will be activated when the door is opened.

DOOR AJAR SYSTEM

All apparatus body doors will be provided with an auto door switch. These switches will operate the compartment interior lights and activate the door ajar indicator on each side of apparatus body when the door is opened. There will be a red door ajar light mounted in the cab, in view of the driver to indicate an unsecured door. There will be a buzzer mounted in the cab that will alert the driver.

BACK-UP ALARM

There will be one-(1) electronic back-up alarm installed at the rear of the apparatus. The alarm will be wired to the transmissions output signal and is automatically activated when the transmission is shifted into reverse.

TWO TONE CUSTOM CAB FINISH

The custom chassis will be finish painted with two colors. The paint colors will be furnished by the fire department. The break in the color will be at the bottom of the chassis windows.

CAB PAINT FINISH - UPPER

The upper cab exterior will have no mounted components prior to painting to assure full coverage of metal treatments.

The apparatus body will then be painted with a minimum of three-(3) coats of color, then a minimum of three coats of high luster final finish polyurethane clear.

These steps are followed as recommended by the paint manufacturer to provide a lasting and high quality gloss finish. All paint products will be provided by Dupont.

The chassis paint code will be White, 817U.

CAB PAINT FINISH - LOWER

The lower cab exterior will have no mounted components prior to painting to assure full coverage of metal treatments.

The apparatus body will then be painted with a minimum of three-(3) coats of color, then a minimum of three coats of high luster final finish polyurethane clear.

These steps are followed as recommended by the paint manufacturer to provide a lasting and high quality gloss finish. All paint products will be provided by Dupont.

The chassis paint code will be Red, B8241 UM Alt 3.

BODY PAINT FINISH

The body exterior will have no mounted components prior to painting to assure full coverage of metal treatments. Box pan compartment doors will be painted separately to assure proper paint coverage on body, doorjambs, and door edges.

All painted surfaces will follow the following procedure to insure a lasting finish:

- Metal surfaces will be sanded to remove all burrs and imperfections, before etching and treatment.
- A wax & grease solvent will be used to clean and prep the aluminum surface. The surface will then be rinsed with fresh water. This step removes wax, grease and other surface contaminants, thus leaving a bright, clean, and conditioned surface.
- A self-etching, metal primer will be applied next. The self-etching primer will fill all of the minor imperfections, scratches, etc. in the metal. This step produces a corrosion resisting conversion coating that prevents off oxidation and other surface contaminants leaving a surface that gives excellent paint adhesion.
- A sandable primer will be sprayed on the metal that seals the surface for the polyurethane paint. A minimum coating thickness of 2 MIL will be applied. Primer is then sanded smooth leaving the best surface for topcoat.
- The apparatus body will then be painted with a minimum of three-(3) coats of color.

These steps are followed as recommended by the paint manufacturer to provide a lasting and high quality gloss finish. Dupont will provide all paint products.

PAINT COLOR CODE

The apparatus body paint code will be Red, B8241 UM Alt 3.

PAINTED WHEELS

Vehicle wheels will be painted to match the exterior paint. They will have silver painted outside trim to complete the wheel finish.

SCOTCHLITE STRIPE

There will be a straight 4" wide white Scotchlite stripe, with an additional 1" wide stripe located above and below. The stripes will be located no higher than 60" from the ground installed on the apparatus cab and body. The stripes will cover a minimum of sixty percent (60%) of each side of the apparatus and forty percent (40%) of the front and rear of the apparatus. The stripe will be installed to meet the current NFPA requirements.

Striping will be white in color.

LETTERING

There will be a maximum of sixty (60) 3" tall Mylar letters applied to the apparatus. The lettering will also have a one color Mylar shade applied.

Lettering will be gold in color.

Shading will be black in color.

PIKE POLE TUBE STYLE

A pair of aluminum tube will be installed for storing a pike poles. One end will be notched to allow the pole to be locked in place.

Location: Ladder tunnel

ZIAMATIC AIR PACK BRACKETS (5)

Five (5) Ziamatic Model #ULLH air pack brackets will be provided with the apparatus. The bracket will meet NFPA 1901.

Locations: Each cab SCBA seat

10' FOLDING LADDER

There will be one (1) Alco-Lite Model FL-10, 10' folding ladder consisting of 1-section aluminum, ladder with rubber feet supplied with the vehicle. Ladder will meet or exceed the latest NFPA standards.

14' ROOF LADDER

There will be one (1) Alco-Lite model PRL-14, 14' roof ladder of single section aluminum, with folding steel roof hooks on one end and steel spikes on the other end supplied with the vehicle. The ladder will meet or exceed the latest NFPA standards.

24' EXTENSION LADDER

There will be one (1) Alco-Lite model PEL-24, 24' two-section, aluminum, extension ladder with steel spikes supplied the vehicle. The ladder will meet or exceed the latest NFPA standards.

DEDICATION PLAQUES (3)

Three (3) dedication plaques shall be provided and installed on the apparatus. The Fire Department shall give information on plaques at pre construction meeting.

PULL-OUT TRAYS-250 LBS QTY (3)

There shall be three (3) 250 lb pull out trays provided on the apparatus. The trays shall be manufactured from 3/16" aluminum plate. The trays shall be located as follows:
L-3
R-3
B-1

ADJUSTABLE SHELVING- MIDLINE- QTY (6)

There shall be six (6) midline adjustable shelves provided on the apparatus. The shelves shall be manufactured from 3/16" aluminum and shall have a 2" lip on all four side. The shelves shall be located in the following compartments:
L-1, L-2, L-3
R-1, R-2, R-3

SCENE LIGHTS – WHELEN 900 SERIES (PR)

There shall be a pair of Whelen 900 series Scene lights provided with the apparatus. The lights shall be located as directed by the fire department

HOSE TRAY- OFFICER SIDE PUMP PANEL

There shall be a running board hose tray installed on the right side of the apparatus. The tray shall have the capacity to hold 25' of 5" LDH hose.

ONE-YEAR PARTS & LABOR WARRANTY

There will be a one-(1) year mechanical parts and labor warranty provided with the apparatus. The apparatus will be free of defects in material and workmanship for a warranty period of one-(1) year after the date on which the apparatus is first delivered to the original purchaser.

TEN-YEAR BODY WARRANTY

There will be a ten-(10) year body warranty on each new fire body/heavy-duty rescue apparatus. The bodies are to be free of structural failures caused by defective design or workmanship for a warranty period of ten-(10) years after the date on which the vehicle is first delivered to the original purchaser or 100,000 miles, which ever occurs first.

FOUR-YEAR PAINT/CORROSION WARRANTY

There will be a four-(4) year paint/corrosion warranty provided. This warranty will cover perforation, blistering, peeling, or any other adhesion defects caused by defective manufacturing methods, or material selections, for a warranty period of four-(4) years or 100,000 miles which occurs first, after the date of which the vehicle is first delivered to the original purchaser.