FERRARA

FERRARA FIRE APPARATUS, INCORPORATED

Leading the Way!

## *FIRE APPARATUS PROPOSAL*

August 3, 2009

Shelby County Fire Department
1075 Mullins Station
Building C, 2nd Floor
Memphis, Tennessee 38134

Supply one (1) or more Ferrara Fire Apparatus, Inc. G-IGN-P750 Custom Pumper per the attached set of specifications for the total sum of Three Hundred Sixty Thousand Three Hundred Eighty Five Dollars and Zero Cents ($357,102.00) per unit.

Vendor:
Ferrara Fire Apparatus, Inc.
27855 James Chapel Road
Holden, LA 70744

GSA Contract #: GS-30F-0001F

DUNS#: 958119026

Tax ID#: 72-1129363

Delivery Time: 45-60 Calendar Days after pre construction conference.

FOB Points: 48 Contiguous States and Washington DC or seaport within the 48 Contiguous States and Washington DC

Sincerely,
Ferrara Fire Apparatus, Inc.

Dave Carlton
Apparatus Division

27855 James Chapel Road • P.O. Box 249 • Holden, LA 70744
www.ferrarafire.com • www.fireequipment.com •E-mail:davec@ferrarafire.com
Phone 225-567-7100 • 800-443-9006 • Fax 225-567-7679

**Shelby County Fire Department**

**Proposal Specifications August 3, 2009**

ONE (1)

**CUSTOM CHASSIS**

IT IS THE INTENT OF THE TECHNICAL SPECIFICATIONS CONTAINED HEREIN TO ENSURE THE CUSTOM CAB AND CHASSIS WE HAVE SPECIFIED SHALL BE ENGINEERED, DESIGNED, AND MANUFACTURED EXCLUSIVELY FOR HEAVY-DUTY CONTINUOUS USE IN EXTREME ENVIRONMENTS AND RIGOROUS ADVERSE CONDITIONS.

EACH CUSTOM CAB AND CHASSIS SHALL BE MANUFACTURED IN STRICT COMPLIANCE WITH ALL APPLICABLE REQUIREMENTS AS SET FORTH IN THE CURRENT EDITION OF THE NATIONAL FIRE PROTECTION ASSOCIATION PAMPHLET 1901 WITH MAXIMUM FIREFIGHTER SAFETY AS THE KEY FOCUS FACTOR THROUGHOUT THE DESIGN AND DEVELOPMENT PHASE OF EACH FIRE AND RESCUE CHASSIS.

ONE (1)

**CHASSIS WHEELBASE**

THE CHASSIS WHEELBASE AS PER DRAWING.

ONE (1)

**CHASSIS FRAME**

THE CHASSIS FRAME SHALL BE CONSTRUCTED OF 110,000-PSI MINIMUM YIELD STEEL THAT HAS BEEN FORMED INTO A "C" CHANNEL SHAPE WITH DIMENSION OF 10.50" X 3.50" X .375 INCHES.

THE FRAME RAILS SHALL BE POWDER COATED IN ORDER TO INSURE SUPERIOR PAINT ADHESION. FRAME CUTOUTS FOR THE ENGINE SHALL BE MADE WITH A PLASMA TORCH IN ORDER TO MINIMIZE THE HEAT-AFFECTED ZONE CAUSED BY THE CUT.

THE RESULTING FRAME SYSTEM SHALL HAVE A MINIMUM SECTION MODULUS OF 18.34 CUBIC INCHES WITH A RESISTING BENDING MOMENT OF 2,017,400-INCH POUNDS PER RAIL. ALL FRAME-MOUNTED COMPONENTS SHALL BE SECURED WITH GRADE EIGHT BOLTS WITH HARDENED WASHERS AND DISTORTED THREAD LOCKNUTS. FLANGED HEAD BOLTS WITH NYLON LOCKING NUTS, OR HUCK BOLTS SHALL NOT BE ACCEPTABLE.

THE APPARATUS MANUFACTURER SHALL PROVIDE A LIFETIME WARRANTY TO THE ORIGINAL PURCHASER AGAINST CRACKING OF THE FRAME RAILS.

ONE (1)

THE FRAME AND RUNNING GEAR SHALL BE PAINTED GLOSS BLACK ENAMEL. THE RUNNING GEAR SHALL CONSIST OF THE AXLES, DRIVELINES, AIR TANKS, STEERING GEAR, FRAME MOUNTED BRACKETS, DRAG LINK, AND FUEL TANK.

THE AIR SYSTEM PIPING AND ELECTRICAL HARNESSES SHALL NOT BE INSTALLED UNTIL AFTER THE PAINTED HAS CURED. THIS SHALL INSURE COMPLETE COVERAGE BEHIND THOSE ITEMS; AS WELL AS TO INSURE THAT AIR PIPING AND WIRING HARNESSES ARE NOT.

ONE (1)

**APPARATUS CAB**

THE CAB SHALL BE AN ENGINE FORWARD MEDIUM FOUR-DOOR (RAISED ROOF) TILT CAB CONSTRUCTED ENTIRELY OF ALUMINUM. THE CAB SHALL BE AN "OPEN INTERIOR" ROLL CAGE DESIGN REQUIRING NO INNER WALLS OR VERTICAL INTERIOR SUPPORTS.

THE CAB ROOF SHALL BE RAISED 8 INCHES FOR ADDITIONAL HEADROOM IN ORDER THAT ALL CREW MEMBERS DERIVE THE BENEFIT OF ADDITIONAL HEADROOM. THE RAISED PORTION SHALL START MIDWAY OVER THE DRIVER AND OFFICER SEATS. THE CAB SHALL BE CAPABLE OF SEATING UP TO SIX FIREFIGHTERS.

ALL STORAGE AREAS INSIDE THE CAB SHALL FULLY COMPLY WITH NFPA 1901 9G RESTRAINT REQUIREMENTS.

**CRASH TEST**

THE CAB SHALL EXCEED THE STRICT AND DETAILED REQUIREMENTS OF THE ECONOMIC COMMISSION FOR EUROPE STRUCTURAL STANDARD, ECE-29R. THE TEST SHALL CONSIST OF AN IMPACT LOAD TEST AND A VERTICAL LOAD TEST TO THE CAB.

THE CAB SHALL HAVE A FRONTAL IMPACT TESTS VIA PENDULUM, WITH AN IMPACT LOAD IN EXCESS OF 127% OF THE ECE-29R STANDARD. THE ESTIMATED SPEED OF THE 3736-LB (1698-KG) PENDULUM SHALL BE A MINIMUM OF 18.2 MPH. THE CAB DOORS SHALL BE CLOSED DURING THE IMPACT TEST BUT BE ABLE TO OPEN AFTER IMPACT. THERE SHALL BE NO PASSENGER INTRUSIONS OR ANY STRUCTURAL COMPONENT FAILURES. THE CAB SHALL MEET OR EXCEED ALL CRITERIA OF THIS PORTION OF THE TEST.

IN CONJUNCTION WITH THE FRONTAL IMPACT TEST, A VERTICAL LOAD TEST SHALL BE IMPLEMENTED TO THE CAB. THE CAB ROOF SHALL BE LOADED WITH A MINIMUM OF 65,979 LBS (29.53 METRIC TONS). THERE SHALL BE NO FAILURE TO THE CAB STRUCTURE OR MOUNTINGS, ANY PASSENGER COMPARTMENT INTRUSION OR DEGRADATION OF OCCUPANT SURVIVAL SPACE, OR ANY OTHER STRUCTURAL FAILURE. THE CAB SHALL MET OR EXCEED ALL CRITERIA OF THIS PORTION OF THE TEST.

A COMPLETE PHOTOGRAPHIC, VIDEO, DATA, AND DIMENSIONAL RECORD OF THESE TESTS SHALL BE AVAILABLE AND PLACED ON RECORD FOR CUSTOMER EVALUATIONS.

**CAB MATERIALS**

THE CAB SHALL BE CONSTRUCTED ENTIRELY OF ALUMINUM ALLOY EXTRUSIONS AND 3/16" (.188) THICK, 5052-H32 ALLOY, MARINE GRADE ALUMINUM SHEETS. THE CORNER POSTS, DOOR SLAM POSTS, ROOF RAILS AND DOORFRAMES SHALL BE MADE OF CUSTOM EXTRUSIONS DESIGNED SPECIFICALLY FOR THIS CAB WITH SLOTS FOR INSERTING THE SKIN. THE REAR WALL AND ROOF SHALL BE REINFORCED WITH A GRID OF RECTANGULAR EXTRUSIONS, WHICH ARE WELDED TO THE OVERALL CAB EXTRUSION FRAMEWORK. THE FRONT CORNER CAPS SHALL CONSIST OF CASTINGS DESIGNED SPECIFICALLY FOR THIS CAB WITH RELIEF AREAS CAST IN PLACE FOR ATTACHMENT OF ROOF SKIN AND INTERSECTING STRUCTURAL EXTRUSIONS. OVERLAPPING FORMED CORNER CAPS ARE NOT ACCEPTABLE.

CAB DIMENSIONS

- OVERALL WIDTH SKIN TO SKIN: 100 INCHES
- OVERALL VEHICLE WIDTH: 120 INCHES (W/STANDARD MIRRORS)
- OVERALL LENGTH: 128 INCHES
- CAB HEIGHT FRONT: 87 INCHES
- CAB HEIGHT REAR: 95 INCHES
- CENTER OF FRONT AXLE TO BACK OF CAB: 54 INCHES
- WINDSHIELD AREA: 4200 SQUARE INCHES
- FRONT GRILL OPENING: 470 SQUARE INCHES
- SIDE GRILL OPENING: 105 SQUARE INCHES
- CAB FULL TILT ANGLE: 45 DEGREES
- CAB FULL TILT HEIGHT: 181 INCHES
- FLOOR TO CEILING IN FRONT: 60 INCHES
- FLOOR TO CEILING IN REAR: 66 INCHES
- ENGINE COVER HEIGHT: NOT TO EXCEED 27-1/2" FRONT-TO-BACK AND SIDE-TO-SIDE

DOUBLE WALL CAB FACE

THE CAB FRONT SHALL BE OF DOUBLE WALL CONSTRUCTION RESULTING IN A SEALED FIREWALL, WHICH PROVIDES FOR INCREASED STRUCTURAL INTEGRITY, CREW SAFETY, AND REDUCED ROAD NOISE IN THE PASSENGER AREA.

THE OUTER WALL IS USED FOR MOUNTING FORWARD LIGHTING, GRILL AND WINDSHIELD WIPERS.

THE INNER PORTION SHALL BE TREATED WITH A HEAVY BLACK UNDERCOATING MATERIAL FOR CORROSION PREVENTION.

SEALED ENGINE TUNNEL

THE ENGINE TUNNEL SHALL BE A STRUCTURAL PART OF THE PASSENGER CAB, CONSTRUCTED FROM WELDED 3/16" ALUMINUM PLATE AND REINFORCED WITH ALUMINUM EXTRUSIONS.

THE REAR OF THE ENGINE TUNNEL SHALL BE NO LESS THAN 49" INCHES FROM THE REAR WALL OF THE CAB, ALLOWING MAXIMUM LEGROOM FOR FORWARD FACING PASSENGER.

AFTER WELDING, THE SEAMS SHALL BE COMPLETELY SEALED WITH SILICONE CAULKING.

ENGINE ENCLOSURES THAT ARE NOT AN INTEGRAL PART OF THE CAB STRUCTURE ARE NOT ACCEPTABLE.

THE INTERIOR OF THE ENGINE TUNNEL SHALL BE INSULATED WITH 1" THICK FOIL BACKED INSULATING FOAM, ATTACHED WITH STUD AND BUTTON METHOD. A CROSS-SECTION ANALYSIS OF THE INSULATION SHALL REVEAL A 1/8" THICK BARRIER MATERIAL FOR ADDITIONAL NOISE AND HEAT INSULATION.

CAB FLOOR

CAB FLOORS SHALL BE CONSTRUCTED FROM AN ALUMINUM EXTRUDED FRAME AND 3/16" THICK ALUMINUM PLATE. FLOOR MATS AND INSULATION ARE DETAILED LATER IN THIS SPECIFICATION.

THE FORWARD CAB FLOOR SHALL BE AS LARGE AS POSSIBLE FOR BOTH THE DRIVER AND OFFICER. FLOORBOARDS SHALL EXTEND IN WIDTH FROM THE SIDE OF THE ENGINE TUNNEL, ALL THE WAY TO THE CAB DOOR INNER PANEL. THEY SHALL EXTEND FORWARD FROM THE SEAT RISER TO THE INNER PORTION OF THE DOUBLE WALL CAB FACE. THE OFFICER SHALL HAVE APPROXIMATELY 28" OF FOOT ROOM.

THE ENTIRE REAR FLOOR OF THE CAB, TO REDUCE TRIP AND FALL HAZARDS, SHALL BE A SINGLE PLANE. IN APPLICATIONS REQUIRING THE USE OF A TOP-MOUNTED PTO, A RAISED AREA IN THE FLOOR MAY BE REQUIRED.

FOR MAXIMUM CREW COMFORT AND ELIMINATE LEG FATIGUE DURING EMERGENCY RESPONSES, THE FLOOR BENEATH THE REAR FACING JUMP SEATS SHALL BE LARGE ENOUGH FOR A SEATED FIREFIGHTER TO REST BOTH FEET SIDE-BY-SIDE. CAB FLOOR DESIGNS THAT ARE WIDE ENOUGH FOR ONLY ONE FOOT SHALL NOT BE ACCEPTED.

**CAB CORROSION PROTECTION**

A CORROSION PREVENTATIVE MATERIAL SHALL BE APPLIED DURING CAB CONSTRUCTION. A TEN-(10) YEAR WARRANTY AGAINST CORROSION PERFORATION SHALL BE PROVIDED FOR THE CAB.

**WHEEL WELL LINERS**

FULL WHEEL WELL LINERS SHALL BE INSTALLED BENEATH THE CAB TO PROTECT THE BOTTOM OF THE CAB FROM ROAD SPLASH. THE LINERS SHALL BE CONSTRUCTED OF ALUMINUM AND BE FULL WIDTH.

THE WHEEL WELL LINERS SHALL BE ATTACHED WITH THREADED FASTENERS AND BE EASILY REMOVABLE FOR SERVICE.

**FENDERETTES**

BRIGHT POLISHED STAINLESS STEEL FENDERETTES SHALL BE INSTALLED AT THE WHEEL WELL OPENINGS. A RUBBER GASKET SHALL BE INSTALLED BETWEEN THE FENDERETTE AND CAB TO ELIMINATE CONTACT OF DISSIMILAR METALS.

**WINDSHIELD**

THE WINDSHIELD SHALL HAVE APPROXIMATELY 4200 SQUARE INCHES OF UNOBSTRUCTED VIEWING AREA. IT SHALL BE A TWO (2) PIECE DESIGN WITH TINTED AUTOMOTIVE SAFETY GLASS, WITH A WRAP AROUND DESIGN. A .030-INCH THICK VINYL LAYER SHALL SEPARATE THE LAMINATED GLASS.

ALL OTHER CAB GLASS SHALL BE TINTED AND TEMPERED.

**INTERMITTENT WINDSHIELD WIPERS**

TWO ELECTRIC "PANTOGRAPH" STYLE WINDSHIELD WIPERS SHALL BE INSTALLED ON THE FRONT FACE OF THE CAB. THE MOTORS SHALL OPERATE THROUGH A 72-DEGREE SWEEP AND INCLUDE 24-INCH BLADES TO GIVE SUPERIOR WIPER COVERAGE. A WASHER RESERVOIR OF NOT LESS THAT 70 OUNCES SHALL BE MOUNTED A LATCHED DOOR RECESSED IN THE OFFICER'S STEP.

A SWITCH LOCATED ON THE TURN SIGNAL CONTROL ARM SHALL OPERATE THE INTERMITTENT WIPERS.

**EXTERIOR GRAB HANDLES**

STAINLESS STEEL HANDRAILS WITH A KNURLED, SLIP-RESISTANT FINISH SHALL BE POSITIONED BEHIND EACH CAB DOOR. GRAB RAILS SHALL BE MINIMUM 24" IN LENGTH. MOLDED RUBBER GASKET SHALL BE MOUNTED BETWEEN THE GRAB HANDLES AND THE CAB IN ORDER TO PREVENT CORROSION DUE TO DISSIMILAR METALS BEING IN CONTRACT.

**EXTREME DUTY CAB INTERIOR**

CAB FLOORS SHALL BE COVERED WITH A PEBBLE GRAIN RUBBER MATTING WITH BARRIER TYPE INSULATION. EDGES OF THE INSULATION SHALL BE TRIMMED WITH ALUMINUM EXTRUDED ANGLE FOR A PLEASING APPEARANCE.

AN INSULATED COVERING SHALL BE FITTED OVER THE ENGINE TUNNEL. MADE FROM THE SAME MATERIAL AS THE CAB FLOOR INSULATION, THIS COVERING SHALL INSULATE THE CAB FROM ENGINE HEAT AND NOISE. A CAST PRODUCTS ALUMINUM DOOR ON TOP OF THE ENGINE TUNNEL SHALL PROVIDE ACCESS FOR FLUID CHECKS.

THE BACK SIDE OF THE ENGINE COVER, AS WELL AS A 2" TO 3" RETURN ON THE TOP SIDE, SHALL BE COVERED WITH ALUMINUM DIAMOND PLATE AND BE OF SUFFICIENT STRENGTH TO ALLOW FOR 9G RESISTANT MOUNTING OF ANY OPTIONAL HAND LIGHTS, ENTRY TOOLS, OR OTHER FIRE RESCUE EQUIPMENT SPECIFIED BY THE CUSTOMER.

THE CAB SHALL HAVE A CUSTOM BUILT, ALUMINUM SMOOTH PLATE DASHBOARD, OVERHEAD CONSOLE, GLOVE BOX, INSTRUMENTATION PANEL AND SWITCH PANEL. THE FRONT OVERHEAD SHALL INCLUDE ROOM FOR THE THREE SUN VISORS AND THE DOOR OPEN INDICATOR LIGHT.

THE FRONT DOOR POSTS SHALL BE TRIMMED WITH STYLED ALUMINUM COVERS THAT CONCEAL ANY WIRING, AS WELL AS INCLUDING A MOUNTING AREA FOR RUBBERIZED GRAB HANDLES. THE CENTER WINDSHIELD POST SHALL BE COVERED ULTRALINER PAINT FINISH.

PRIOR TO INSTALLING THE HEADLINER AND REAR WALL PADDING, MINIMUM R-7 INSULATION, SHALL BE INSTALLED BETWEEN THE INTERLOCKING EXTRUSIONS.

THESE COVERS SERVE TO FINISH THE INTERIOR, COVER WIRING HARNESSES AND INSULATE THE INTERIOR FROM SOUND AND HEAT.

SUN VISORS

THE CAB SHALL BE EQUIPPED WITH A MINIMUM OF THREE (3) SUN VISORS. THE VISORS SHALL BE INSTALLED ON THE OVERHEAD PANEL AND PROVIDE APPROXIMATELY 90 PER CENT COVERAGE ACROSS THE WIDTH OF THE CAB. THE VISORS SHALL BE APPROXIMATELY 30 INCHES WIDE AND NINE (9) INCHES TALL.

GLOVE BOX

THE GLOVE BOX SHALL BE AN INTEGRAL PART OF THE WELDED ALUMINUM DASHBOARD ASSEMBLY AND LOCATED ON THE OFFICER SIDE OF THE CAB. THE STORAGE AREA OF THE GLOVE BOX SHALL BOLT IN PLACE FOR EASY SERVICE ACCESS. THE DOOR SHALL BE DROP DOWN STYLE AND CONSTRUCTED FROM BRUSHED STAINLESS STEEL WITH A RECESSED LATCH. THE AREA ABOVE THE GLOVE BOX SHALL BE FLAT FOR A WORK SURFACE OR OPTIONAL MDT MOUNTING.

**CAB STEPS**

ALL CAB STEPS SHALL BE OF A STATIONARY, FIXED DESIGN THAT USE NO MOVING PARTS AND REQUIRES NO PERIODIC MAINTENANCE OTHER THAN CLEANING.

THERE SHALL BE AN OPEN-GRIP, BRIGHT FINISH STEP AT EACH CAB DOOR OPENING. THE AREA UNDER THE STEP SHALL BE ENCLOSED TO PREVENT ROAD DIRT FROM ENTERING THE CAB. THERE SHALL BE PROVISIONS MADE AT THE FRONT OF THE STEP FOR EASILY FLUSHING OUT ANY DIRT ACCUMULATION.

AT EACH DOOR OPENING THERE SHALL ALSO BE AN INTERMEDIATE CAB STEP. INTERMEDIATE STEPS SHALL BE FULL WIDTH OF THE DOOR STEP AREA AND CONSTRUCTED FROM EMBOSSED ALUMINUM DIAMOND PLATE.

STEP HEIGHTS

THE DISTANCE FROM LEVEL GROUND TO THE FIRST CAB STEP SHALL BE 19-21 INCHES (24" WITH INDEPENDENT FRONT SUSPENSION), WITHOUT USING SWING-DOWN STYLE OR UNDER-CAB "STIRRUP" AUXILIARY STEPS.

THE DISTANCE FROM FIRST CAB STEP TO INTERMEDIATE STEP SHALL BE APPROXIMATELY 12.5 INCHES FRONT AND REAR.

THE DISTANCE FROM INTERMEDIATE STEP TO CAB FLOOR SHALL BE APPROXIMATELY 9.5 INCHES IN THE FRONT AND 12 INCHES IN THE REAR.

ONE (1)

**CUMMINS ISL ENGINE**

THE VEHICLE SHALL BE EQUIPPED WITH A CUMMINS ISL 400 TURBOCHARGED DIESEL ENGINE. STANDARD FEATURES INCLUDE AN ELECTRONIC GOVERNOR, ELECTRONICALLY CONTROLLED UNIT INJECTORS, FARR AIR CLEANER, A 12-VOLT 42 MT DELCO STARTER AND A WABCO 18.7 CFM COMPRESSOR. THE OIL FILTER SHALL BE A FULL FLOW AND BYPASS DESIGN.

THIS ENGINE CONFORMS TO THE US 2007 EPA REGULATIONS FOR HEAVY-DUTY DIESEL ENGINES.

ENGINE SPECIFICATIONS

MODEL: ISL
NUMBER OF CYLINDERS: SIX (6)
BORE AND STROKE: 4.49" X 5.69"
DISPLACEMENT: OF 8.9 L
RATED HORSEPOWER: 400 @ 2100 RPM
PEAK TORQUE: 1200 @ 1300 RPM
GOVERNED SPEED: 2200 RPM

ENGINE WARRANTY

THERE SHALL BE A FIVE-(5) YEAR OR 100,000 MILE WARRANTY PROVIDED BY THE ENGINE MANUFACTURER, WHICH EVER COMES FIRST, AFTER THE DATE OF DELIVERY TO THE FIRST USER.

ONE (1)

**FRONT AXLE**

THE FRONT AXLE SHALL BE A MERITOR (ROCKWELL) MFS-18 WITH 18,000-POUND CAPACITY. IT SHALL BE EQUIPPED WITH OIL SEALS AND TRANSPARENT COVER FOR OIL LEVEL INSPECTION.

ONE (1)

**FRONT SUSPENSION**

THE FRONT SPRINGS SHALL BE SEMI-ELLIPTICAL, MINIMUM OF 4" WIDE X 54" LONG (FLAT), MINIMUM OF 11 LEAVES X .499" THICKNESS WITH A CAPACITY OF 18,000 POUNDS. GREASE FITTINGS FOR LUBRICATION SHALL BE INSTALLED IN THE SPRING PINS. DOUBLE ACTING SHOCK ABSORBERS SHALL BE INSTALLED. AXLE STOPS WITH ENERGY ABSORBING JOUNCE BUMPERS SHALL BE SUPPLIED ON THE SPRING TOP PAD.

ONE (1)

**EX-225 DISC BRAKES**

THE CHASSIS SHALL BE EQUIPPED WITH EX-225 DISC BRAKES FOR THE FRONT AXLE.

ONE (1)

**MERITOR (ROCKWELL) AXLE WARRANTY**

THE STANDARD MERITOR (ROCKWELL MFS) FIVE-(5) YEAR PARTS AND TWO-(2) YEAR LABOR WARRANTY WITH UNLIMITED MILES SHALL COVER THE FRONT AXLE. WEAR ITEMS ARE NOT COVERED.

ONE (1)

**STEERING SYSTEM**

THE STEERING SYSTEM SHALL BE A PACKAGE CERTIFIED BY TRW FOR THE APPLICATION. ALL COMPONENTS BETWEEN THE STEERING COLUMN AND THE FRONT AXLE SHALL BE MANUFACTURED BY TRW. A NON-CERTIFIED SYSTEM SHALL NOT BE ACCEPTABLE.

THE STEERING SYSTEM SHALL USE A SINGLE TRW TAS-85 STEERING GEAR WITH THE CAPACITY TO STATIC STEER THE CHASSIS LOADED TO 18,000 POUNDS WITH 315-SIZE TIRE WITHOUT EXCEEDING 88% OF THE RATED TORQUE OUTPUT OF THE GEAR. THE USE OF TWO-(2) SMALLER GEARS OR A SINGLE GEAR WITH AN ASSIST CYLINDER SHALL NOT BE ACCEPTABLE.

ONE (1)

**FRONT TIRES**

THE FRONT TIRES SHALL BE GOODYEAR 315/80R22.5 L/20 PLY- G670RV ALL WEATHER TREADS WITH A CAPACITY OF 18,000 POUNDS.

ONE (1)

**CRAMP ANGLE FRONT AXLE**

THE FRONT AXLE, CRAMP ANGLE SHALL BE 45 DEGREES.

ONE (1)

**ALUMINUM FRONT WHEELS**

THE FRONT WHEELS SHALL BE ALCOA POLISHED ALUMINUM FOR 315 TIRES WITH A RATING OF 18,000#.

ONE (1)

**FRONT WHEEL TRIM**

THE FRONT AXLE SHALL BE TRIMMED WITH STAINLESS STEEL "BABY MOON" HUBCAPS (WITH HOLE FOR OIL SEALS) AND STAINLESS LUG NUT COVERS.

ONE (1)

**REAR AXLE**

THE REAR AXLE SHALL BE A MERITOR (ROCKWELL) RS-24-160 WITH A 24,000-POUND RATING FOR THE FIRE SERVICE. IT SHALL BE EQUIPPED WITH OIL SEALS.

ONE (1)

**REAR SUSPENSION**

THE REAR SUSPENSION SHALL INCLUDE A MAIN SPRING PACK WITH 14 LEAVES, AND AN AUXILIARY SPRING PACK WITH FOUR LEAVES. THE SUSPENSION SHALL BE A SELF-LEVELING SLIPPER TYPE WITH TORQUE LEAF AND VARIABLE RATE. THE REAR SUSPENSION SHALL HAVE A GROUND RATING OF 27,000 LBS.

ONE (1)

**AXLE WARRANTY**

THE STANDARD MERITOR (ROCKWELL) FIVE-(5) YEAR PARTS AND TWO-(2) YEAR LABOR WARRANTY WITH UNLIMITED MILES SHALL COVER THE REAR AXLE (RS-24-160). WEAR ITEMS ARE NOT COVERED.

ONE (1)

**EX225 DISC BRAKES**

THE CHASSIS SHALL BE EQUIPPED WITH EX-225 DISC BRAKES UP TO 27,000-POUND REAR AXLE.

ONE (1)

**STANDARD DIFFERENTIAL**

THE ROCKWELL RS SERIES REAR AXLE SHALL HAVE A STANDARD DIFFERENTIAL.

ONE (1)

**VEHICLE TOP SPEED**

THE REAR AXLE SHALL BE GEARED FOR A TOP SPEED OF 62-65 MPH AT GOVERNED ENGINE SPEED.

ONE (1)

**WABCO- 4 CHANNEL ABS SYSTEM**

A WABCO, 4-CHANNEL ANTI-LOCK BRAKING SYSTEM SHALL BE INSTALLED. THE SYSTEM SHALL INCLUDE FOUR-(4) WHEEL SENSORS AND FOUR-(4) MODULATORS TO CONTROL AND COMPENSATE BRAKING FORCE AT EACH WHEEL.

AN ABS WARNING LIGHT SHALL BE INSTALLED ON THE DRIVER'S DASH. THE LIGHT REMAINS ILLUMINATED UNTIL THE VEHICLE IS MOVING AT LEAST FOUR-(4) MILES PER HOUR. AN ABS TEST SWITCH SHALL BE INSTALLED IN THE "DIAGNOSTIC INFORMATION PANEL". THE SWITCH, WHEN PRESSED, SENDS THE SYSTEM INTO DIAGNOSTIC MODE CAUSING THE ABS LIGHT TO BLINK (I/O) INDICATING A POSSIBLE SYSTEMS FAILURE.

WARRANTY ON THIS SYSTEM IS 3-YEARS/300,000 MILES.

ONE (1)

**COOLING SYSTEM FAN**

THE ENGINE COOLING SYSTEM SHALL INCORPORATE A HEAVY-DUTY FAN, BELT DRIVEN ON THE ENGINE. A SHROUD AND RECIRCULATION SHIELD SYSTEM SHALL BE USED TO ENSURE AIR THAT HAS PASSED THROUGH THE RADIATOR IS NOT DRAWN THROUGH IT AGAIN.

ONE (1)

**ENGINE COOLING SYSTEM**

THE ENGINE COOLING SYSTEM SHALL HAVE THE CAPACITY TO COOL THE ENGINE ACCORDING TO THE ENGINE MANUFACTURER REQUIREMENTS.

RADIATOR

THE ENGINE RADIATOR SHALL BE OF A BOLTED DESIGN AND HAVE A MINIMUM CORE AREA OF 1570 SQUARE INCHES. THE TOP AND BOTTOM TANKS SHALL BE STAMPED 11-GAUGE STEEL. THE TANKS SHALL BE ATTACHED TO THE HEADER ASSEMBLIES WITH A MINIMUM OF FIFTY-(50), 5/16" BOLTS. THE SPACING BETWEEN FASTENERS SHALL NOT EXCEED 2.00 INCHES IN ORDER TO MINIMIZE THE POSSIBILITY OF LEAKS.

THE HEADER PLATES SHALL BE MADE OF 16-GAUGE BRASS WHILE THE TUBES SHALL BE .0068-INCH THICK BRASS AND .076 BY .625 INCHES IN SIZE. THE TUBES SHALL HAVE A SMOOTH BORE WITH WELDED SEEMS WHICH ALLOWS FOR CLEANING OF THE RADIATOR.

THE RADIATOR SHALL CONTAIN THREE ROWS OF TUBES WITH A MINIMUM OF 98 TUBES PER ROW FOR A TOTAL OF NOT LESS THAN 294 TUBES. THE TUBES SHALL BE ARRANGED IN AN INLINE PROFILE ACROSS THE CORE. LOUVERED SERPENTINE FINS CONSTRUCTED OF COPPER WITH A DENSITY NOT GREATER THAN 16 FINS PER INCH SHALL BE USED IN THE CONSTRUCTION OF THE RADIATOR.

THE RADIATOR TUBES SHALL BE ATTACHED TO THE HEADER PLATES WITH A DUAL BONDING PROCESS. THE COOLANT SIDE CONNECTION SHALL BE WELDED, WHILE THE AIRSIDE SHALL BE SOLDERED.

THE TOP TANK SHALL INCLUDE AN INTEGRAL DEAERATION TANK, WHICH REMOVES AIR FROM THE ENGINE WATER. THE TOP TANK SHALL INCLUDE A SIGHT GLASS FOR COOLANT LEVEL INSPECTION WITHOUT REMOVING THE RADIATOR CAP. A LOW COOLANT WARNING SHALL BE INCORPORATED TO ALERT THE DRIVER.

THE BOTTOM TANK OF THE RADIATOR SHALL INCORPORATE OIL TO WATER PLATE-TYPE COOLER FOR THE TRANSMISSION. THE COOLER IS DESIGNED TO CAUSE A TURBULENT FLOW OF THE TRANSMISSION OIL THROUGH THE CORE TO FORCE HEAT TRANSFER. THE COOLER SHALL BE SUFFICIENT TO COOL ALLISON TRANSMISSION WITHOUT OUTPUT RETARDERS.

A HIGH EFFICIENCY FAN SHALL BE SURROUNDED BY A FAN SHROUD. THE SWEEP OF THE FAN SHALL NOT EXCEED THE WIDTH OF THE RADIATOR CORE.

FAN DIAMETERS THAT EXCEED THE WIDTH OF THE RADIATOR CORE SHALL NOT BE ACCEPTABLE.

CHARGE AIR COOLER

THE CHARGE AIR COOLER SHALL BE CONSTRUCTED OF ALUMINUM WITH CAST, ALUMINUM SIDE TANKS. THE COOLER SHALL HAVE A FRONTAL CORE AREA OF NOT LESS THAN 1033 SQUARE INCHES.

THE EXTERIOR FINS SHALL BE LOUVERED SERPENTINE DESIGN CONSTRUCTED OF .006-INCH THICK ALUMINUM AND HAVE A DENSITY NO GREATER THAN SEVEN-(7) FINS PER INCH. THE INTERNAL FINS SHALL BE DESIGNED TO CREATE AIR TURBULENCE IN ORDER TO INCREASE HEAT TRANSFER EFFICIENCY.

THE CHARGE AIR COOLER SHALL BE MOUNTED DIRECTLY AHEAD OF THE RADIATOR AND TO THE RADIATOR HEADERS. RUBBER ISOLATORS SHALL BE USED AT THE MOUNTING POINTS TO REDUCE TRANSMISSION OF VIBRATIONS.

THE PIPING BETWEEN THE CHARGE AIR COOLER AND ENGINE SHALL USE FOUR-(4) PLY SILICONE WOVEN NOMEX HOSES WITH STAINLESS STEEL BANDS. THE BANDS ARE USED TO MAINTAIN THE SHAPE OF THE HOSE DURING CHANGING TURBO BOOST PRESSURES. THE HOSES SHALL BE ATTACHED WITH STAINLESS STEEL CONSTANT TENSION HOSE CLAMPS.

ONE (1)

**ENGINE BRAKE**

THE ENGINE SHALL BE EQUIPPED WITH A JACOBS C-BRAKE COMPRESSION BRAKE. THERE SHALL BE A SINGLE OFF / LOW / HIGH SWITCH TO CONTROL THE JAKE BRAKE. THE ENGINE BRAKE SWITCH SHALL BE MOUNTED IN THE CAB.

A PUMP SHIFT, INTERLOCK CIRCUIT SHALL BE PROVIDED TO PREVENT THE ENGINE BRAKE FROM ACTIVATING DURING PUMPING OPERATION. THE ENGINE BRAKE SHALL INTERFACE WITH THE WABCO ABS BRAKE CONTROLLER TO PREVENT ENGINE BRAKE OPERATION DURING ADVERSE BRAKING CONDITIONS.

ONE (1)

**DRIVELINES**

THE CHASSIS SHALL BE EQUIPPED WITH SPICER 1710 SERIES DRIVESHAFT FULL ROUND YOKES AND UNIVERSAL JOINTS. THE DRIVESHAFT TUBING SHALL BE A MINIMUM OF 4.00" DIAMETER WITH .134" WALL THICKNESS. THE DRIVELINES SHALL BE BALANCED AT A MINIMUM OF 3000 RPM.

ONE (1)

**ENGINE COOLANT FILTER**

A PRE-CHARGED SPIN-ON FILTER, WITH CORROSION INHIBITORS SHALL BE INSTALLED IN THE COOLING SYSTEM. SHUT OFF VALVES SHALL ALSO BE SUPPLIED.

ONE (1)

**AUXILIARY ENGINE COOLER**

THE COOLING SYSTEM SHALL HAVE A TUBE AND BUNDLE ENGINE COOLER MOUNTED IN THE UPPER RADIATOR WATER PIPE. WATER FROM THE FIRE PUMP SHALL BE CIRCULATED THROUGH 1/2" TUBING TO THE COOLER. A VALVE ON THE PUMP PANEL SHALL CONTROL THE COOLING CIRCUIT.

ONE (1)

**SILICONE COOLANT HOSES**

THE CHASSIS SHALL BE EQUIPPED WITH SILICONE HOSES FOR THE RADIATOR AND HEATER CIRCUITS.

ONE (1)

**COOLANT HOSE CLAMPS, CONSTANT TENSION**

CONSTANT TENSION HOSE CLAMPS SHALL BE PROVIDED FOR ALL COOLANT HOSES OF 1/4" DIAMETER AND GREATER.

ONE (1)

**ALTERNATOR**

THE ALTERNATOR SHALL BE 270 AMPS LEECE NEVILLE MODEL 4864JB, ENGINE DRIVEN VIA A POLY-GROOVE POWER BELT AND TENSIONED BY A THREADED ROD. THE ALTERNATOR SHALL MEET ALL CURRENT APPLICABLE NFPA 1901 EDITION REQUIREMENTS FOR PERFORMANCE.

ONE (1)

**BATTERIES**

THE BATTERY SYSTEM SHALL BE A SINGLE SYSTEM CONSISTING OF FOUR-(4) GROUP 31, 12-VOLT DC, HEAVY-DUTY, HIGH CYCLE AUTOMOTIVE BATTERIES. THE BATTERY BANK SHALL HAVE A GROUP RATING OF 2500 COLD CRANKING AMPERES (CCA) AND A RESERVE OF 720 MINUTES AT ZERO DEGREES FAHRENHEIT.

ONE (1)

**STAINLESS STEEL BATTERY BOXES**

THE CHASSIS BATTERIES SHALL BE MOUNTED IN WELDED AND BOLTED STAINLESS STEEL BATTERY BOX. THE BATTERY HOLD-DOWNS SHALL BE MADE OF STRUCTURAL, STAINLESS STEEL ANGLE. PAINTED CARBON STEEL BATTERY BOXES SHALL NOT BE ACCEPTABLE.

ONE (1)

**TOTAL SYSTEM MANAGER - CLASS 1**

THE APPARATUS SHALL BE EQUIPPED WITH A CLASS 1 TOTAL SYSTEM MANAGER (TSM) FOR PERFORMING ELECTRICAL LOAD MANAGEMENT. THE TSM SHALL HAVE TWO-(2) MODES OF OPERATION, A "CALLING RIGHT OF WAY" AND A "BLOCKING RIGHT OF WAY". THE "BLOCKING RIGHT OF WAY" MODE IS ACTIVATED ONLY WHEN THE PARK BRAKE IS SET. LOAD SHEDDING SHALL "ONLY" OCCUR WHEN THE APPARATUS IS IN THE "BLOCKING RIGHT OF WAY" MODE OR WHEN THE BATTERY VOLTAGE LEVEL REACHES YOUR PROGRAMMED SHED LEVEL.

OUTPUTS 1-12 SHALL BE INDEPENDENTLY PROGRAMMABLE TO SEQUENCE ON WITH THE IGNITION OR MASTER WARNING SWITCH. OUTPUTS 1-12 SHALL ALSO BE PROGRAMMABLE TO BE ACTIVATED DURING THE "CALLING RIGHT OF WAY" MODE AND OR THE "BLOCKING RIGHT OF WAY" MODE. OUTPUT 13 IS USER CONFIGURABLE OUTPUT AND IS PROGRAMMABLE FOR ACTIVATING BETWEEN 10.5 AND 15 VOLTS. OUTPUT 14 SHALL PROVIDE A LOW VOLTAGE WARNING FOR AN ISOLATED BATTERY. OUTPUT 15 SHALL BE DESIGNATED TO ACTIVATE A FAST IDLE SYSTEM. OUTPUT 16 SHALL PROVIDE A LOW VOLTAGE ALARM THAT ACTIVATES AT THE NFPA REQUIRED 11.8 VOLTS.

THE TOTAL SYSTEM MANAGER SHALL HAVE A DIGITAL DISPLAY TO INDICATE SYSTEMS VOLTAGE IS IN NORMAL OPERATION MODE AND INDICATES THE OUTPUT CONFIGURATION DURING PROGRAMMABLE MODE.

THE TOTAL SYSTEM MANAGER SHALL BE PROTECTED AGAINST REVERSE POLARITY AND SHORTED OUTPUTS, AND BE ENCLOSED IN A METAL ENCLOSURE TO ENHANCE EMR/RFI PROTECTION.

ONE (1)

**TRANSMISSION**

THE CHASSIS SHALL BE EQUIPPED WITH AN ALLISON EVS3000 AUTOMATIC TRANSMISSION. IT SHALL BE EQUIPPED WITH 4TH GEN OPERATING CONTROLS AND PROGRAMMED FOR FIRE APPARATUS VOCATION. AN ELECTRONIC OIL LEVEL INDICATOR SHALL BE PROVIDED AS WELL AS A DIAGNOSTIC READER PORT CONNECTION. THE TRANSMISSION SHALL BE GEARED TO PROVIDE ONE-TO-ONE RATIO IN FOURTH GEAR FOR FIRE PUMP APPLICATIONS. THIS DEDICATED "LOCKUP" CIRCUIT IS PROVIDED FOR PUMP OPERATION. THE TRANSMISSION FIFTH GEAR SHALL BE AN OVERDRIVE RATIO, PERMITTING THE VEHICLE TO REACH ITS TOP SPEED AT THE GOVERNED ENGINE SPEED. **TRANSYND HEAVY-DUTY TRANSMISSION FLUID SHALL BE STANDARD.**

THE TRANSMISSION SHALL BE EQUIPPED WITH DUAL PTO PORTS WITH ENGINE SPEED CAPABILITIES.

THE TRANSMISSION SHALL BE COOLED BY THE RADIATOR-MOUNTED HEAT EXCHANGER.

ONE (1)

**TRANSMISSION SHIFTER**

THE TRANSMISSION SHALL BE CONTROLLED BY AN ALLISON PUSH BUTTON TYPE SHIFT CONTROL. IT SHALL BE INTERNALLY ILLUMINATED FOR NIGHT OPERATION. IT SHALL BE MOUNTED TO THE RIGHT OF THE STEERING COLUMN ON THE DRIVER'S DASH CONSOLE. THE TRANSMISSION, UPON START-UP, SHALL SELECT FIVE-(5) SPEED OPERATION.

ONE (1)

**TRANSMISSION WARRANTY**

THE TRANSMISSION SHALL HAVE A FIVE-(5) YEAR WARRANTY, WITH UNLIMITED MILEAGE, PARTS, AND LABOR INCLUDED.

ONE (1)

**FUEL FILTER**

THE CUMMINS ENGINE SHALL BE SUPPLIED WITH A FUEL WATER SEPARATOR WITH A BOTTOM DRAIN VALVE.

ONE (1)

**INSTRUMENTATION**

FOR EASY VIEWING, GAUGES SHALL BE BLACK FACED WITH WHITE LETTERING AND ADJUSTABLE INTENSITY, AMBER LED BACKLIGHTING. IN ORDER TO REDUCE REPLACEMENT AND MAINTENANCE COSTS, THE GAUGES PROVIDED SHALL BE SEPARATE FROM ONE ANOTHER AND NOT IN A CLUSTER OR ARRANGEMENT. THE GAUGES SHALL MEET SAE J-1939 PROTOCOL TO ELIMINATE REDUNDANT SENDING UNITS. GAUGES MUST BE FULLY SEALED TO 6 PSI. GAUGES SHALL HAVE AN OPERATING TEMPERATURE RANGE OF -40F TO 185F. THE GAUGE CRYSTAL SHALL BE POLYCARBONATE, ANTI-FOG, AND ANTI-SCRATCH COATED. THE PANELS SHALL BE DIVIDED INTO GROUPS OF INSTRUMENTS THAT MAKE IDENTIFICATION SENSIBLE AND EASY TO VIEW.

THE FOLLOWING PANELS SHALL BE INCLUDED:

- TWO DRIVER SIDE GAUGE PANELS
- ONE DRIVER SIDE WARNING LIGHT PANEL
- DRIVER SIDE PUMP SHIFT PANEL
- DRIVER SIDE PARK BRAKE PANEL
- DRIVER SIDE DIAGNOSTIC PANEL
- DRIVER SIDE IGNITION PANEL
- CENTER MOUNTED, MINIMUM TWENTY (20) POSITION SWITCH AND SIREN PANEL
- OFFICER SIDE INFORMATION PANEL

THE FOLLOWING INSTRUMENTS SHALL BE INCLUDED:

- DIAL TYPE SPEEDOMETER WITH DIGITAL ODOMETER AND TRIP ODOMETER THAT IS ACTIVE WHEN PUMPING
- DIAL TYPE TACHOMETER WITH DIGITAL HOUR METER AND TRIP HOUR METER ALONG WITH A DIGITAL, FOUR-LINE DIAGNOSTIC DISPLAY
- DIAL TYPE ENGINE OIL PRESSURE GAUGE WITH WARNING LIGHT AND ALARM
- DIAL TYPE WATER TEMPERATURE WITH WARNING LIGHT AND ALARM
- DIAL TYPE TRANSMISSION TEMPERATURE WITH WARNING LIGHT AND ALARM
- DIAL TYPE FRONT AIR PRESSURE GAUGES WITH WARNING LIGHT AND ALARM
- DIAL TYPE REAR AIR PRESSURE GAUGE WITH WARNING LIGHT
- DIAL TYPE VOLTMETER
- DIAL TYPE FUEL LEVEL GAUGE WITH LOW FUEL INDICATOR LEVEL
- AIR CLEANER RESTRICTION LIGHT
- HIGH BEAM INDICATOR
- PARKING BRAKE INDICATOR
- TURN SIGNAL INDICATORS
- DIAGNOSTIC INDICATORS FOR AIRBAG, ENGINE, TRANSMISSION, AND ABS

THE IGNITION PANEL SHALL INCLUDE THE IGNITION SWITCH, ENGINE START, INSTRUMENT LAMP DIMMER SWITCH, TRANSMISSION PUSHBUTTON SHIFT PAD AND FRONT AIR CONDITIONING AND/OR HEATING SWITCHES AND REMOTE HEATED MIRROR CONTROLS (IF APPLICABLE).

AN ANTI-LOCK BRAKING SYSTEM (ABS) TEST SWITCH AND PARK BRAKE CONTROL VALVE SHALL BE LOCATED TO THE RIGHT OF THE STEERING COLUMN.

**SERVICE ACCESS**

THE DRIVER'S INSTRUMENTATION AREA SHALL BE MADE OF TEXTURED BLACK NON-GLARE PANELS AFFIXED TO THE ALUMINUM DASH. THERE SHALL BE A SINGLE GAUGE PANEL, SECURED WITH A BOTTOM HINGE AND FOUR (4) QUARTER-TURN FASTENERS. ACCESS TO THE GAUGE CLUSTERS SHALL BE

ACCOMPLISHED SIMPLY BY RELEASING THE LATCHES AND PULLING THE PANEL OUTWARD. OTHER GAUGE ACCESS DESIGNS ARE NOT ACCEPTABLE.

THE CHASSIS ELECTRICAL PANEL SHALL BE LOCATED IN THE CENTER OF THE ALUMINUM DASH, BETWEEN THE SWITCH PANEL AND THE WINDSHIELD. THERE SHALL BE A LIFT UP COVER WITH TWO (2) RECESSED LIFT-AND-TURN LATCHES FOR QUICK ACCESS TO THE PANEL. THE UNDERSIDE OF THE PANEL SHALL HAVE A PRE-PRINTED DIAGRAM THAT CLEARLY DEPICTS THE FUNCTION OF EACH CIRCUIT BREAKER AND RELAY. THE VEHICLE LOAD MANAGER SHALL BE LOCATED IN THIS PANEL. THE OPENING TO THE ELECTRICAL SHALL MEASURE APPROXIMATELY 19" WIDE NEAR THE SWITCH PANEL AND 37" WIDE TOWARD THE WINDSHIELD.

ELECTRONIC DIAGNOSTIC CONNECTIONS FOR THE ENGINE, TRANSMISSION, AND ABS BRAKES SHALL BE LOCATED IN THE LOWER-LEFT PANEL ON THE CAB DASH.

ONE (1)

**STEERING COLUMN**

THE STEERING COLUMN SHALL BE A DOUGLAS AUTOTEC TILT AND TELESCOPE. A LEVER MOUNTED ON THE SIDE OF THE COLUMN SHALL CONTROL THE TILT AND TELESCOPE FEATURES. A SIGNAL-STAT (SELF-CANCELING) TURN SIGNAL SWITCH SHALL BE MOUNTED TO THE COLUMN. THE STEERING SHAFT FROM THE COLUMN TO THE METER BOX SHALL HAVE A RUBBER BOOT TO COVER THE SHAFT SLIP AND A SECOND RUBBER BOOT TO SEAL THE PASSAGE HOLE IN THE FLOOR.

THE STEERING WHEEL SHALL BE 18 INCHES IN DIAMETER.

THE SIGNAL-STAT TURN SIGNAL SWITCH SHALL INCLUDE THE FOLLOWING FUNCTIONS:

- LEFT AND RIGHT TURN SIGNALS
- HIGH BEAM DIMMER CONTROL
- HAZARD WARNING SWITCH
- TWO SPEED WITH INTERMITTENT WINDSHIELD WIPER CONTROL
- WINDSHIELD WASHER CONTROL

ONE (1)

**INTERIOR FINISH - GRAY**

THE INTERIOR OF THE CAB SHALL BE PAINTED WITH GRAY POLYURETHANE ULTRALINER. THE CAB METAL FINISH SHALL BE COVERED WITH ONE COAT OF BASE SELF-ETCHING PRIMER. THERE SHALL BE A SEALER PRIMER APPLIED WHICH SHALL BE SANDED TO A SMOOTH FINISH. TWO COATS OF FINISHED PAINT SHALL BE APPLIED.

THE FOLLOWING INTERIOR COMPONENTS SHALL BE COVERED WITH HEAVY-DUTY GRAY VINYL:

- HEADLINER (FRONT AND REAR)
- REAR WALL

ONE (1)

THE FLOOR MATS SHALL BE BLACK PEBBLE GRAIN VINYL WITH .250" FOAM BACKING. THE EDGES OF THE FLOOR MATS SHALL BE TRIMMED WITH BRIGHT ALUMINUM ANGLE.

ONE (1)

**CAB DOORS**

ALL CAB DOORS SHALL BE "FULL LENGTH" DESIGNED TO COVER THE STEP WELL AREA. EACH CAB DOOR SHALL BE FLUSH TYPE WITH TWO CONCEALED HINGES. ALL CAB DOORS SHALL OPEN A MINIMUM OF 85 DEGREES.

FRONT DOORS

THE FRONT DOORS SHALL BE APPROXIMATELY 40" INCHES WIDE BY 78.5" INCHES TALL. THE DOORS SHALL HAVE A TWO-PIECE WINDOW, ONE OPERATIONAL AND ONE FIXED. THE COMBINED VIEWING AREA SHALL BE NO LESS THAN 796 SQUARE INCHES. FOR ADDED SAFETY, THE FRONT CAB DOOR WINDOWS SHALL SLANT DOWN FOR MAXIMUM VISIBILITY.

REAR DOORS

THE REAR DOORS SHALL BE APPROXIMATELY 34" INCHES WIDE BY 86.5" INCHES TALL. THE DOORS SHALL HAVE A TWO-PIECE WINDOW, ONE OPERATIONAL AND ONE FIXED. THE COMBINED VIEWING AREA SHALL BE NO LESS THAN 867 SQUARE INCHES.

DOOR HARDWARE

THE CAB DOORS SHALL USE INTERNAL AND EXTERNAL PADDLE LATCHES WITH A RUBBER GASKET ISOLATING THE LATCH FROM THE PAINTED OUTSIDE SURFACE. THE EXTERNAL LATCH SHALL HAVE A CHROME PLATED FINISH AND THE INTERIOR STAINLESS STEEL. BOTH LATCHES SHALL BE OVERSIZED FOR EASY ACCESS WITH A GLOVED HAND.

DOVETAIL CATCH ASSEMBLIES SHALL BE INSTALLED IN THE DOOR JAMB. THE DOVETAIL CATCH SHALL BE V-SHAPED PROVIDING A POSITIVE CATCH AND RELEASE SYSTEM.

ONE (1)

DOOR LOCKS

THERE SHALL BE INDIVIDUAL MANUAL TWIST TYPE DOOR LOCKS AT EACH DOOR HANDLE. IN ACCORDANCE WITH FMVSS 206, ALL EXTERIOR DOOR LOCKS SHALL BE KEYED ALIKE.

ONE (1)

WINDOW REGULATORS

THE TWO FRONT CAB DOORS SHALL BE EQUIPPED WITH WINDOW REGULATORS. TWO CREW CAB DOORS SHALL BE EQUIPPED WITH WINDOW REGULATORS. A HAND CRANK LOCATED AT EACH DOOR SHALL OPERATE EACH WINDOW.

ONE (1)

DOOR PANELS UPPER

THE INNER FRONT AND REAR DOORS PANELS SHALL BE COVERED WITH A POLYURETHANE ULTRALINER EXTENDING FROM THE WINDOW DOWN TO THE LOWER DOOR PANEL. THE DOOR PANELS SHALL MATCH THE INTERIOR JOB COLOR.

ONE (1)

DOOR PANELS LOWER

THE INNER FRONT AND REAR DOOR LOWER DOOR PANELS SHALL BE COVERED WITH A POLYURETHANE ULTRALINER EXTENDING FROM THE BOTTOM OF THE UPPER DOOR PANEL TO THE BOTTOM OF THE DOOR. THE PANELS SHALL MATCH THE INTERIOR JOB COLOR.

ONE (1)

FOUR (4) "STOP" SIGNS SHALL BE INSTALLED ON THE VEHICLE, ONE-(1) EACH SIDE FRONT AND REAR LOWER DOOR PANELS.

ONE (1)

**REAR STEPS**

THE REAR CAB DOOR STEPPING SURFACES SHALL BE TRIMMED WITH ALUMINUM TREADPLATE. THERE SHALL BE TREADPLATE COVERS THAT PROVIDE ACCESS TO THE CHASSIS BATTERY SYSTEM.

ONE (1)

**CAB TILT PUMP**

AN ELECTRIC OVER HYDRAULIC CAB LIFT PUMP SHALL BE PROVIDED TO TILT THE CAB TO SERVICE THE ENGINE. THE PUMP SHALL BE OPERATED BY A REMOTE CONTROL THAT PLUGS INTO A SOCKET. THERE SHALL BE AN INTERLOCK TO KEEP THE CAB FROM RUNNING UNLESS APPARATUS IS IN NEUTRAL, WITH THE PARK BRAKE SET.

WARNING LIGHTS SHALL ILLUMINATE AT THE CENTER WARNING CLUSTER ON THE DASH, AND NEAR THE CAB TILT CONTROL WHENEVER THE CAB IS NOT FULLY LATCHED IN THE DOWN POSITION.

ONE (1)

**INTERIOR GRAB HANDLES**

THE FOLLOWING GRAB HANDLES SHALL BE INSTALLED IN THE CAB:

- RUBBERIZED STEEL GRAB HANDLES SHALL BE INSTALLED ON THE DRIVER AND OFFICER'S UPPER HINGE POST.
- A BRIGHT STAINLESS STEEL GRAB RAIL SHALL BE INSTALLED ON THE REAR DOORS AT THE HEIGHT WHERE THE WINDOW STOPS IT TRAVEL WHEN OPEN.

ONE (1)

**FIXED SIDE WINDOW**

A WINDOW OF NOT LESS THAN 16-1/2" WIDE BY 33-1/2" HIGH SHALL BE INSTALLED IN THE LEFT SIDEWALL OF THE CAB BETWEEN THE FRONT AND REAR DOOR. THE GLASS SHALL BE TEMPERED AND RETAINED WITH ONE-PIECE TRIPLE LOCKING RUBBER LACING.

ONE (1)

**FIXED SIDE WINDOW**

A WINDOW OF NOT LESS THAN 16-1/2" WIDE BY 33-1/2" HIGH SHALL BE INSTALLED IN THE RIGHT SIDEWALL OF THE CAB BETWEEN THE FRONT AND REAR DOOR. THE GLASS SHALL BE TEMPERED AND RETAINED WITH ONE-PIECE TRIPLE LOCKING RUBBER LACING.

ONE (1)

**LIGHTED GRILLE**

THE FRONT GRILLE SHALL BE A CAST ALUMINUM ASSEMBLY WITH 430 SQUARE INCHES OF OPEN AREA. THE GRILLE SHALL BE BACKED WITH AN ALUMINUM HONEYCOMB MESH TO PROTECT THE RADIATOR. THE FRONT GRILLE SHALL BE A PERSONALIZED FRONT GRILLE WITH THE FFA DESIGN LOGO.

ONE (1)

**HEATING AND AIR CONDITIONING**

THE CABS CLIMATE CONTROL SYSTEM SHALL USE THREE-(3) HEATER-AIR CONDITIONER UNITS DIVIDED INTO TWO SEPARATE CIRCUITS. THE FRONT CIRCUITS SHALL USE TWO SMALL HEATER-AIR CONDITIONING UNITS, ONE MOUNTED UNDER THE DASH ON THE DRIVER'S SIDE AND ONE UNDER THE OFFICER'S SIDE. THESE UNITS ARE EACH RATED AT 24,000 BTU AND 2 TONS COOLING. THESE UNITS SHALL BE PLUMBED TO THEIR OWN 9.5 CUBIC INCH PER REVOLUTION COMPRESSOR AND SERPENTINE FIN DESIGN CONDENSER. THE UNITS SHALL BLOW UP TOWARD THE WINDSHIELD THROUGH VENTS IN THE DASH. THERE SHALL BE TWO-(2) ADJUSTABLE VENTS INSTALLED TO DIRECT AIR AT THE LOWER PORTION OF THE DRIVER AND OFFICER SEATING AREAS. THREE SWITCHES INCLUDING LOW/MED/HIGH, RIGHT/LEFT, AND HEAT/OFF/COOL SHALL CONTROL THE UNITS.

THIS UNIT SHALL HAVE A RATING OF 36,000 BTU (HEATING) AND 3-3/4 TONS (45,000 BTU) OF COOLING. THE EVAPORATOR WITH ADJUSTABLE DIFFUSERS SHALL BE MOUNTED ON THE ENGINE TUNNEL.

THE AIR CONDITIONING SHALL HAVE A TEMPERATURE CONTROL AND A THREE-(3) SPEED BLOWER CAPABLE OF CIRCULATING 650 CUBIC FEET OF AIR PER MINUTE. THE HEATER SHALL BE PLUMBED WITH A SHUT OFF VALVE AT THE ENGINE.

A BLEND AIR SWITCH SHALL BE INSTALLED TO OPERATE BOTH THE FRONT HEATING AND COOLING SYSTEMS. THIS PROVIDES HOT AND DRY AIR FOR DEFOGGING PURPOSES.

THE ENTIRE ROOF AND BACK WALL SHALL BE HEAVILY INSULATED WITH 1" FOAM TO ENHANCE THE COOLING SYSTEM.

ALL UNITS SHALL UTILIZE PERMANENT MAGNET MOTORS.

CLIMATE CONTROL SYSTEM USING DUAL COMPRESSORS OR DUAL CONDENSERS PLUMBED INTO A SINGLE CIRCUIT SHALL NOT BE ACCEPTABLE SINCE THE FAILURE OF ONE UNIT SHALL SHUT DOWN THE ENTIRE SYSTEM.

ONE (1)

**DEFROSTER FANS**

TWO (2) 6" WINDSHIELD DEFROSTER FANS SHALL BE MOUNTED ON THE OVERHEAD CONSOLE, ONE FOR DRIVER, AND ONE FOR OFFICER SIDE OF THE VEHICLE.

ONE (1)

**CAB MIRRORS HEATED / REMOTE**

TWO SIDE-MOUNTED REAR VIEW MIRRORS SHALL BE INSTALLED WITH A 14.5" X 7" MIRROR HEAD AND A SEPARATE 6"X 8" PARABOLIC MIRROR. THE MIRROR HEAD SHALL BE HEATED AND REMOTELY ADJUSTABLE BY THE DRIVER. THE MIRRORS SHALL BE AERODYNAMICALLY DESIGNED TO REDUCE WIND BUFFETING AND RESULTANT VIBRATION. THE HOUSINGS SHALL BE A FINISHED BLACK IN COLOR.

THE MIRRORS SUPPORT TUBES SHALL BE 7/8" STAINLESS STEEL, AND INCLUDES BREAKAWAY MOUNTING BRACKETS.

ONE (1)

**DRIVER'S SEAT**

THE DRIVER'S SEAT SHALL BE A BOSTROM MODEL SIERRA HIGH-BACK AIR SUSPENSION SEAT. THE SEAT SHALL HAVE 4-WAY ADJUSTABILITY BY THE DRIVER IN ACCORDANCE WITH SAE J1517. THE SEAT SHALL BE EQUIPPED WITH AN INTEGRATED 3-POINT SEAT BELT WITH AN AUTOMATIC RETRACTOR. THE BELT SHALL BE RED IN COLOR TO MEET CURRENT NFPA REQUIREMENTS.

ONE (1)

**OFFICER SEAT - SCBA**

THE OFFICER'S SEAT SHALL BE A BOSTROM TANKER 450 SCBA WITH AIR SUSPENSION SEAT. SEAT BACK SHALL INCLUDE A SPRING-LOADED FLIP-UP HEADREST AND ZIAMATIC AIR PACK BRACKET WITH "CRS" STRAPS. A REMOVABLE PADDED COVER SHALL BE SUPPLIED OVER THE SCBA CAVITY. THE SEAT SHALL BE EQUIPPED WITH A 3-POINT SHOULDER HARNESS WITH LAP BELT AND AN AUTOMATIC RETRACTOR BUILT INTO THE SEAT ASSEMBLY. THE BELT SHALL BE RED IN COLOR TO MEET CURRENT NFPA REQUIREMENTS.

THE CUSTOMER MUST SPECIFY THE SIZE AND MANUFACTURER OF THE BOTTLE TO BE USED IN THE BRACKET.

ONE (1)

**DRIVER'S SIDE REAR FACING CREW SEAT**

ONE-(1) SCBA - ABTS (ALL BELTS TO SEATS) OUTBOARD, REAR FACING, SEAT SHALL BE INSTALLED BEHIND THE DRIVER. THE SEAT SHALL BE BOSTROM TANKER 450 SCBA - ABTS NON-SUSPENSION SEAT. THE SEAT BACK SHALL INCLUDE SPRING-LOADED FLIP-UP HEADREST AND ZIAMATIC AIR PACK BRACKET WITH "CRS"

STRAP. REMOVABLE (PADDED) COVER SHALL BE SUPPLIED OVER THE SCBA CAVITY. THE SEAT SHALL BE EQUIPPED WITH INTEGRATED 3-POINT SHOULDER HARNESS, LAP BELT, AND AUTOMATIC RETRACTORS BUILT INTO THE SEAT ASSEMBLY. THE BELT SHALL BE RED IN COLOR TO MEET CURRENT NFPA REQUIREMENTS.

THE CUSTOMER IS TO SPECIFY THE SIZE AND MANUFACTURER OF THE BOTTLES TO BE USED IN THE BRACKETS.

ONE (1)

**OFFICER'S SIDE REAR FACING CREW SEAT**

ONE-(1) SCBA - ABTS (ALL BELTS TO SEATS) OUTBOARD, REAR FACING, SEAT SHALL BE INSTALLED BEHIND THE OFFICER. THE SEAT SHALL BE BOSTROM TANKER 450 SCBA - ABTS NON-SUSPENSION SEAT. THE SEAT BACK SHALL INCLUDE SPRING-LOADED FLIP-UP HEADREST AND ZIAMATIC AIR PACK BRACKET WITH "CRS" STRAP. REMOVABLE (PADDED) COVER SHALL BE SUPPLIED OVER THE SCBA CAVITY. THE SEAT SHALL BE EQUIPPED WITH INTEGRATED 3-POINT SHOULDER HARNESS, LAP BELT, AND AUTOMATIC RETRACTORS BUILT INTO THE SEAT ASSEMBLY. THE BELT SHALL BE RED IN COLOR TO MEET CURRENT NFPA REQUIREMENTS.

THE CUSTOMER IS TO SPECIFY THE SIZE AND MANUFACTURER OF THE BOTTLES TO BE USED IN THE BRACKETS.

ONE (1)

**SEAT COLOR**

THE CAB SEATS SHALL BE GRAY IN COLOR.

ONE (1)

**SEAT MATERIAL**

THE SEATS SHALL BE COVERED WITH DURAWEAR MATERIAL.

ONE (1)

**STANDARD FRONT LIGHTING**

HEADLAMPS, TURN SIGNALS, FRONT WARNING, AND INTERSECTION LIGHTS SHALL BE LOCATED WITHIN CHROME WARNING LIGHT MODULES.

ONE (1)

**HEADLIGHTS**

FOUR-(4) HALOGEN RECTANGULAR HEADLIGHTS SHALL BE INSTALLED IN THE WARNING LIGHT MODULES, TWO-(2) EACH SIDE. THE HEADLIGHTS SHALL BE MOUNTED IN THE LOWER POSITIONS OF THE MODULE.

ONE (1)

**TURN SIGNALS**

WHELEN MODEL 600 AMBER LED TURN SIGNAL LAMPS SHALL BE INSTALLED DIRECTLY ABOVE THE LOW BEAM HEADLIGHTS IN THE WARNING LIGHT MODULES.

ONE (1)

**TURN MARKER LIGHTS**

WHELEN MODEL 400 AMBER LED LAMPS SHALL BE MOUNTED OUTBOARD OF THE TURN SIGNAL AT A 45-DEGREE ANGLE OFF THE FRONT OF THE CAB. THE LAMPS ARE PART OF THE WARNING LIGHT MODULE, AND ARE VISIBLE FROM BOTH THE FRONT AND SIDE OF THE VEHICLE.

ONE (1)

**LOWER FRONT WARNING LIGHTS**

TWO WHELEN MODEL 600 RED LED LIGHT HEADS SHALL BE INSTALLED INBOARD OF THE TURN SIGNAL IN THE WARNING LIGHT MODULES. OSCILLATING PRODUCTS ARE NOT ACCEPTABLE DUE TO NARROW SWEEP ANGLES PROVIDED BY SUCH LIGHTS.

ONE (1)

**L.E.D. CORNERING LIGHTS**

WHELEN MODEL 400 FLASHING LED-CORNERING LAMPS SHALL BE MOUNTED BELOW THE MARKER LIGHT IN THE WARNING LIGHT MODULE. THE LAMPS ARE MOUNTED AT A 45-DEGREE ANGLE OFF THE FRONT OF THE CAB AND ARE VISIBLE FROM THE SIDE AND FRONT OF THE VEHICLE.

ONE (1)

**DOT LIGHTS - LED**

FIVE-(5) LED MARKER LIGHTS SHALL BE PROVIDED. THE LIGHTS SHALL BE LOCATED AS HIGH AS PRACTICAL AND SPACED PER DOT GUIDELINES.

ONE (1)

**CEILING BEACON**

A WHELEN MODEL TIR3 DOOR AJAR LIGHT SHALL BE LOCATED ON THE CAB'S CEILING. THIS LIGHT SHALL BE A SELF-CONTAINED FLASHING LIGHT THAT ACTIVATES WHEN ANY OF THE APPARATUS DOORS ARE OPEN. THE LENS COLOR SHALL BE RED.

ONE (1)

**DOME LIGHTS**

THERE SHALL BE FOUR-(4) COMBINATION CLEAR/RED DOME LIGHT MOUNTED IN THE CAB HEADLINER. THERE SHALL BE ONE-(1) LIGHT LOCATED OVER THE DRIVER'S SEAT, ONE-(1) LOCATED OVER THE OFFICER'S SEAT, AND TWO-(2) LOCATED IN THE REAR CREW AREA OVER THE REAR DOORS, ONE-(1) EACH SIDE.

EACH DOME LIGHT SHALL HAVE A ONE-PIECE BEZEL, WHICH SURROUNDS AN INDIVIDUALLY SWITCHED INCANDESCENT CLEAR LIGHT, AND AN INDIVIDUALLY SWITCHED LED RED LIGHT.

THE CLEAR LIGHTS SHALL ACTIVATE WHEN ANY CAB DOOR IS OPENED. ANY RED LIGHTS THAT ARE TURNED ON SHALL AUTOMATICALLY SWITCH OFF WHEN THE CLEAR LIGHT COMES ON.

ONE (1)

**ENGINE MAINTENANCE LIGHTS**

TWO-(2) WHITE 4" INCANDESCENT ROUND LIGHTS SHALL BE MOUNTED UNDER THE CAB. THE LIGHTS SHALL AUTOMATICALLY ACTIVATE WHEN THE CAB IS TILTED.

ONE (1)

**CAB GROUND LIGHTS**

THERE SHALL BE FOUR-(4) ROUND 4" CLEAR WATERPROOF LIGHTS MOUNTED UNDER THE CAB, ONE-(1) UNDER EACH DOOR. ALL CAB GROUND LIGHTS SHALL AUTOMATICALLY ACTIVATE WHEN ANY CAB DOOR IS OPENED, OR BY A SWITCH ON THE DASH.

ONE (1)

**FRONT BUMPER**

A 12" INCH HIGH, 10-GAUGE POLISHED STAINLESS STEEL, TWO-RIB BUMPER SHALL BE PROVIDED. THE BUMPER SHALL BE THE FULL WIDTH OF THE CAB AND WRAP AROUND WITH AN 8-INCH RADIUS.

ONE (1)

**BUMPER EXTENSION - 24"**

FRONT FRAME, EXTENSION RAILS, SHALL BE BOLTED TO THE MAIN FRAME THROUGH REINFORCEMENT PLATES THAT ARE BACKED BY THE FRONT ENGINE MOUNTING CROSSMEMBER. THE FINISHED APPARATUS MUST BE ABLE TO BE LIFTED AT THE FRONT BUMPER WITHOUT STRUCTURAL DAMAGE TO THE EXTENSION RAILS FROM VEHICLE EXTRACTION.

A STRUCTURAL BACKING PLATE CONSTRUCTED FROM STEEL CHANNEL SHALL BE INSTALLED BEHIND THE FRONT BUMPER. THIS CHANNEL FOLLOWS THE CONTOUR OF THE BUMPER AND WRAPS AROUND FROM SIDE TO SIDE. THE BUMPER SHALL BE BOLTED TO THE CHANNEL AND IN TURN, THE CHANNEL SHALL BE BOLTED TO THE FRAME RAIL EXTENSIONS.

THE FRONT BUMPER SHALL EXTEND TWENTY-FOUR (24") INCHES AHEAD OF THE FRONT FACE OF THE CAB.

ONE (1)

**AIR HORNS**

TWO-(2) GROVER AIR HORNS SHALL BE INSTALLED ON THE APPARATUS. THE AIR HORNS SHALL BE CONSTRUCTED FROM SPUN BRASS MATERIAL AND CHROME PLATED. THE AIR HORNS SHALL BE MOUNTED, ONE-(1) EACH SIDE, OUTBOARD THE FRAME RAILS. THE SOUNDING UNIT SHALL BE DIE CAST AND EASILY SEPARATED FOR SERVICE. THE HORNS SHALL BE MOUNTED BEHIND THE CUTOUTS IN THE FRONT BUMPER.

THE BUMPER MUST BE EXTENDED TO PERMIT AIR HORN CLEARANCE FROM CHASSIS OBSTRUCTIONS.

ONE (1)

**AIR HORN FOOT SWITCH**

THERE SHALL BE A FLOOR MOUNTED FOOT SWITCH TO OPERATE THE AIR HORN. SWITCH SHALL BE MOUNTED ON THE DRIVER'S SIDE IN THE CAB. THE SWITCH SHALL BE MOUNTED AS HIGH AND AS FAR OUTBOARD AS POSSIBLE.

ONE (1)

**TOW HOOKS**

TWO-(2) CHROME TOW HOOKS SHALL BE MOUNTED TO THE BOTTOM OF THE FRONT BUMPERS FRAME EXTENSION WITH GRADE 8 BOLTS.

ONE (1)

**AIR BRAKE SYSTEM**

THE AIR BRAKE SYSTEM SHALL MEET THE REQUIREMENTS OF FMVSS-121. THE SYSTEM SHALL CONSIST OF THREE-(3) RESERVOIRS WITH A TOTAL CAPACITY OF 5100 CUBIC INCHES. THE SYSTEM SHALL BE OF DUAL CIRCUIT AND QUICK BUILD UP DESIGN POWERED BY AN ENGINE MOUNTED GEAR DRIVEN AIR COMPRESSOR. THE SYSTEM SHALL BE PROTECTED BY A HEATED AIR DRYER AND SHALL HAVE A HEATED AUTOMATIC MOISTURE EJECTOR ON THE WET TANK. QUARTER TURN (BRASS) DRAIN VALVES SHALL BE INSTALLED ON THE OTHER TANKS.

THE SYSTEM SHALL BE PLUMBED USING COLOR-CODED NYLON AIRLINES WITH "BRASS" PUSH LOCK FITTINGS.

ONE (1)

**AIR DRYER**

THE AIR SYSTEM SHALL INCLUDE A BENDIX AD-9 AIR DRYER WITH INTEGRAL 12-VOLT HEATED MOISTURE EJECTOR. THE AIR DRYER SHALL HAVE A DESICCANT CARTRIDGE AND INCORPORATE AN INTEGRAL TURBO CUTOFF VALVE. THE TURBO CUTOFF ALLOWS THE AIR DRYER TO PURGE WATER AND CONTAMINATES WITHOUT ANY LOSS OF TURBO BOOST OR ENGINE HORSEPOWER.

ONE (1)

**REAR TIRES**

THE REAR TIRES SHALL BE GOODYEAR 12R22.5 LOAD RANGE "H" G-124 TRACTION TREADS WITH A CAPACITY OF 27,000 POUNDS.

ONE (1)

**ALUMINUM REAR WHEELS**

REAR WHEELS SHALL BE 10-BOLT, HUB-PILOTED TYPE ALCOA POLISHED ALUMINUM, 8.25" X 22.5". THE OUTSIDE WHEELS SHALL BE POLISHED ON THE OUTER SURFACE. THE GROUND RATING SHALL BE A MINIMUM OF 27,000 POUNDS.

ONE (1)

**REAR WHEEL TRIM**

THE REAR AXLE WHEELS SHALL BE TRIMMED WITH STAINLESS STEEL "LINCOLN HAT" HUB COVERS AND STAINLESS STEEL NUT COVERS.

ONE (1)

**EXHAUST SYSTEM**

THE ENGINE EXHAUST SYSTEM SHALL BE HORIZONTAL IN DESIGN USING ALUMINIZED STEEL TUBING AND MUFFLER MOUNTED UNDER THE FRAME RAIL RIGHT SIDE EXTENDING FORWARD OF THE REAR WHEELS.

ONE (1)

**EXHAUST SYSTEM**

THE ENGINE EXHAUST SYSTEM SHALL INCLUDE AN ALUMINIZED STEEL TAILPIPE THAT SHALL EXIT ON THE RIGHT HAND SIDE OF THE APPARATUS AHEAD OF THE REAR TIRES.

ONE (1)

**65-GALLON FUEL TANK**

THE CHASSIS SHALL BE EQUIPPED WITH A 65-GALLON REAR MOUNTED FUEL TANK. THE TANK SHALL BE CONSTRUCTED OF 12-GAUGE STEEL. THE TANK SHALL BE MOUNTED WITH STRAPS WITH RUBBER ISOLATORS TO THE BOTTOM FLANGE OF THE FRAME RAILS. THE TANK SHALL BE CERTIFIED TO MEET FMCSR 393.65 AND 393.67. IT SHALL BE BAFFLED, VENTED AND HAVE A DRAIN PLUG MOUNTED ON THE BOTTOM.

A "TUBE TYPE" FUEL SENDING-UNIT SHALL BE PROVIDED TO STABILIZE FUEL LEVEL READINGS DUE TO FUEL MOVEMENT IN THE TANK.

ONE (1)

**BRAIDED WIRE REINFORCED FUEL LINES**

THE FUEL LINES SHALL BE WIRE BRAID REINFORCED FUEL HOSE WITH REUSABLE FITTINGS, ROUTED ALONG THE INSIDE OF THE FRAME RAILS, PROTECTED AGAINST CHAFFING BY NON-CONDUCTIVE FRAME MOUNTED STAND OFF FASTENERS.

ONE (1)

**TWO TONE CAB PAINT FINISH**

ALL CAB EXTERIOR COMPONENTS INCLUDING DOORS AND GLASS, SHALL BE REMOVED. THE COMPLETE CAB EXTERIOR SHALL BE THOROUGHLY SANDED, SOLVENT CLEANED AND FINISHED WITH HIGH LUSTER POLYURETHANE PAINT BEFORE MOUNTING OF BODY TO ASSURE FULL COVERAGE OF PAINT TO ALL SURFACES.

THE CUSTOM CAB SHALL BE A TWO-TONE FINISH PAINTED COLOR. THE PAINT COLOR SHALL BE FURNISHED BY THE FIRE DEPARTMENT. THE BREAK IN THE COLOR SHALL BE AT THE BOTTOM OF THE CHASSIS WINDOW, UNLESS OTHERWISE SPECIFIED BY THE DEPARTMENT.

| | | | |
|---|---|---|---|
| TOP COLOR: | WHITE | PAINT NO. | |
| BOTTOM COLOR: | RED | PAINT NO. | |

ONE (1)

**HOSE AND HARNESS ROUTING**

ANY WIRING HARNESS OR HYDRAULIC /AIR HOSES THAT MUST PASS TO THE OUTSIDE OF THE FRAME SHALL NOT RUN OVER OR UNDER THE FRAME FLANGES. HYDRAULIC AND AIRLINES SHALL PASS THROUGH THE FRAME USING BULKHEAD FITTINGS. ALL BATTERY CABLES SHALL ALSO UTILIZE BULKHEAD FITTINGS. WIRING HARNESSES SHALL PASS THROUGH THE FRAME WITHIN A PROTECTIVE RUBBER BOOT. FOR EASE OF MAINTENANCE, THE HYDRAULIC AIR HOSES AND ELECTRICAL WIRING HARNESS SHALL BE RAN SEPARATELY DOWN EACH SIDE OF THE FRAME RAILS. THE HYDRAULIC AND AIR HOSES RUN DOWN THE RIGHT SIDE OF THE FRAME RAILS, AND THE ELECTRICAL HARNESSES RUN DOWN THE LEFT SIDE OF THE FRAME RAILS.

ONE (1)

**CAB TILT, LOCK SUSPENSION**

THE CAB SHALL BE SUPPORTED AT FOUR POINTS. AT THE FRONT, THERE SHALL BE TWO CENTER BONDED BRONZE BUSHINGS. AT THE REAR, THERE SHALL BE TWO HYDRAULIC LOCKING LATCHES.

THE CAB SHALL TILT 45 DEGREES BY MEANS OF A PAIR OF HYDRAULIC CYLINDERS DRIVEN BY THE ELECTRIC PUMP. THE TILT SYSTEM GEOMETRY SHALL BE DESIGNED IN SUCH A WAY THAT THE MAXIMUM HYDRAULIC PRESSURE IN THE SYSTEM DOES NOT EXCEED ONE-HALF THE PRESSURE RATING OF THE CYLINDERS OR PUMP WHEN THE CAB IS EMPTY. THIS ALLOWS THE FIRE DEPARTMENT TO LEAVE SOME EQUIPMENT IN THE CAB WHEN MAINTENANCE IS REQUIRED (ALTHOUGH THIS EQUIPMENT MUST BE SECURED).

ONCE THE CAB IS FULLY TILTED, A SAFETY LATCH SHALL AUTOMATICALLY ENGAGE AND ACT AS A POSITIVE LOCK. THE LOCK IS RELEASED BY A PULL CABLE. THE HYDRAULIC CYLINDERS SHALL BE EQUIPPED WITH VELOCITY FUSES TO PREVENT THE CAB FROM FALLING, SHOULD THE HYDRAULIC SYSTEM FAIL.

THE FRONT OF THE CAB PIVOTS AND RIDES ON THE CENTER BONDED BUSHINGS BY MEANS OF LUBRICATED PIVOT PINS THAT RETAIN THE CAB YOKE IN THE BUSHINGS. THE BUSHINGS ALLOW LIMITED MOVEMENT OF THE CAB, AND ISOLATE THE CAB FROM NOISE AND VIBRATION.

THE REAR MOUNTS CONSIST OF A PAIR OF HYDRAULIC CAB LATCHES MOUNTED ON RUBBER CUSHIONED MOUNTING BRACKETS. LATCHES RELEASE WHEN THE PRESSURE IN THE TILT SYSTEM EXCEEDS 500 PSI.

WARNING LIGHTS SHALL ILLUMINATE AT THE CENTER WARNING CLUSTER ON THE DASH, AND NEAR THE CAB TILT CONTROL WHENEVER THE CAB IS NOT FULLY LATCHED IN THE DOWN POSITION.

AN IGNITION INTERLOCK SYSTEM SHALL BE INSTALLED FOR CAB TILT OPERATION. CAB TILT OPERATION REQUIRES BOTH THE MASTER BATTERY AND IGNITION SWITCH BE IN THE ON POSITION WITH THE PARKING BRAKE SET.

ONE (1)

**SIDE GRILLES**

BRIGHT STAINLESS STEEL GRILLES SHALL BE INSTALLED APPROXIMATELY 70" ABOVE GROUND LEVEL ONE-(1) EACH SIDE CAB BETWEEN THE FRONT AND REAR CAB DOORS. THE GRILLES SHALL HAVE A MINIMUM OPEN AREA OF NOT LESS THAN 119 SQUARE INCHES SERVING AS AN AIR INTAKE AND WARM AIR DISPERSANT SYSTEM.

AN EMBER SEPARATOR SHALL BE INSTALLED BETWEEN THE STAINLESS STEEL GRILL AND THE AIR FILTER SYSTEM ALLOWING FRESH AIR TO PASS THROUGH TO THE ENGINE WHILE PREVENTING PARTICLES OF .039IN. (1.0MM) OR LARGER FROM ENTERING THE SYSTEM IN ACCORDANCE WITH THE LATEST VERSION OF NFPA AND EASILY ACCESSIBLE THROUGH THE EXTERIOR STAINLESS STEEL GRILLE.

ONE (1)

**SIREN**

THERE SHALL BE ONE-(1) WHELEN MODEL WS-295HFS2 HANDS FREE SIREN CONTROL HEAD MOUNTED IN THE EMERGENCY LIGHTING SWITCH PANEL. THE SIREN BUTTON SHALL BE ACTIVATED WHEN THE SIREN IS IN HAND FREE MODE. THE SIREN SHALL INCORPORATE A ROTARY SELECTOR. THERE SHALL BE AN ON/OFF POWER SWITCH, A PUSH BUTTON SWITCH FOR MANUAL SIREN OR AIR HORN TONES, AND A NOISE-CANCELING MICROPHONE WITH VOLUME CONTROL.

ONE (1)

**SPEAKER**

THERE SHALL BE A WHELEN MODEL SP122 FM 100-WATT SPEAKER INSTALLED THRU THE FRONT BUMPER. THE SPEAKER SHALL BE WIRED TO THE SIREN.

ONE (1)

**BACK-UP ALARM**

THERE SHALL BE ONE-(1) ELECTRONIC BACK-UP ALARM INSTALLED AT THE REAR OF THE APPARATUS. THE ALARM SHALL BE WIRED TO THE TRANSMISSIONS OUTPUT SIGNAL AND IS AUTOMATICALLY ACTIVATED WHEN THE TRANSMISSION IS SHIFTED INTO REVERSE.

ONE (1)

**MANUALS AND DOCUMENTATION ON CD**

THE FOLLOWING MANUAL GUIDES AND PARTS INFORMATION CD SHALL BE REQUIRED WITH THE DELIVERY OF THE APPARATUS.

TWO-(2) SETS OF THE FOLLOWING SHALL BE SUPPLIED:

- OPERATOR MANUAL
- PARTS LIST
- ELECTRICAL WIRING DIAGRAMS
- ELECTRICAL TROUBLESHOOTING GUIDE
- AIR SYSTEM DIAGRAM
- HYDRAULIC SYSTEM DIAGRAM

ONE (1)

**CARRYING CAPACITY PLATE**

THERE SHALL BE A PERMANENTLY ATTACHED PLATE MOUNTED IN PLAIN VIEW OF THE DRIVER IN ACCORDANCE WITH NFPA 1901 STANDARDS.

THE TAG SHALL INCLUDE THE FOLLOWING:

- OVERALL HEIGHT
- OVERALL LENGTH
- GVWR
- SEATING CAPACITY

ONE (1)

**SEATING CAPACITY PLATE**

THERE SHALL BE A PERMANENTLY ATTACHED PLATE MOUNTED IN PLAIN VIEW IN THE CAB. THE PLATE SHALL READ "SEATING CAPACITY - 5 PEOPLE".

EACH SEATING POSITION THAT IS NOT, INTENDED TO BE USED DURING TRANSIT SHALL BE INDIVIDUALLY LABELED AS FOLLOWS:
WARNING: THIS SEAT IS NOT TO BE OCCUPIED WHILE VEHICLE IS IN MOTION.

ONE (1)

**FLUID CAPACITY PLATE**

A PERMANENTLY AFFIXED FLUID DATE PLATE SHALL BE INSTALLED IN THE DRIVING COMPARTMENT TO INDICATE THE TYPE AND QUANTITIES OF THE FOLLOWING FLUID USED IN THE VEHICLE.

| | |
|---|---|
| A. | ENGINE OIL |
| B. | ENGINE COOLANT |
| C. | CHASSIS TRANSMISSION FLUID |
| D. | PUMP TRANSMISSION LUBRICATION FLUID (IF APPLICABLE) |
| E. | PUMP PRIMER FLUID (IF APPLICABLE) |
| F. | DRIVE AXLE(S) LUBRICATION FLUID |
| G. | AIR CONDITIONING REFRIGERANT |
| H. | AIR CONDITIONING LUBRICATION OIL |
| I. | POWER STEERING FLUID |
| J. | CAB TILT MECHANISM FLUID |
| K. | TRANSFER CASE FLUID |
| L. | EQUIPMENT RACK FLUID |
| M. | AIR COMPRESSOR SYSTEM LUBRICANT |
| N. | GENERATOR SYSTEM LUBRICANT |
| O. | FRONT TIRE PRESSURE - COLD |
| P. | REAR TIRE PRESSURE - COLD |

THE FOLLOWING INFORMATION SHALL ALSO BE SUPPLIED ON THE FLUID DATA PLATE:

| | |
|---|---|
| A. | CHASSIS MANUFACTURER |
| B. | PRODUCTION NUMBER |
| C. | PAINT NUMBER |
| D. | YEAR BUILT |
| E. | DATE SHIPPED |
| F. | VEHICLE IDENTIFICATION NUMBER |

ONE (1)

**OVERALL HEIGHT PLATE**

A HEIGHT OF VEHICLE PLATE SHALL BE MOUNTED IN THE DRIVING COMPARTMENT AND CLEARLY IDENTIFIED AND VISIBLE TO THE DRIVER WHILE SEATED. THE PLATE SHALL SHOW THE COMPLETED FIRE APPARATUS HEIGHT, LENGTH, (IN FEET AND INCHES) AND GROSS VEHICLE WEIGHT (IN POUNDS). THE INFORMATION SHALL BE CURRENT TO THE APPARATUS MANUFACTURED DATE.

IF CHANGES OF THE VEHICLE OCCUR WHILE IN SERVICE, THE FIRE DEPARTMENT MUST REVISE THE HEIGHT PLATE.

ONE (1)

**DO NOT RIDE PLATE**

A PERMANENTLY AFFIXED WARNING PLATE SHALL BE INSTALLED STATING "DO NOT RIDE". THE PLATE SHALL BE LOCATED ON THE APPARATUS AT THE REAR STEP AREA, AND AT ANY CROSS WALKS IF THEY EXIST. THE PLATE IS TO WARN PERSONNEL THAT RIDING ON OR IN THESE AREAS WHILE THE VEHICLE IN MOTION IS PROHIBITED.

ONE (1)

**REFLECTIVE MATERIAL - 4 DOORS - CUSTOM CABS**

THERE SHALL BE 96 SQUARE INCHES OF REFLECTIVE MATERIAL INSTALLED ON THE INSIDE OF THE DRIVER, OFFICER, AND CREW DOORS.

ONE (1)

**LOCK UP - EVS3000**

AN ELECTRONIC LOCKUP RELAY SYSTEM SHALL BE INSTALLED BETWEEN THE ENGINE AND TRANSMISSION AND THE FIRE PUMP. THE LOCKUP SHALL PLACE THE TRANSMISSION INTO THE 1:1 GEAR AUTOMATICALLY FOR PUMP OPERATIONS.

ONE (1)

**FRONT MUD FLAPS**

MUD FLAPS SHALL BE MADE FROM BLACK HARD RUBBER AND INSTALLED AT THE REAR OF THE FRONT CAB FENDERS.

ONE (1)

**REAR MUD FLAPS**

MUD FLAPS SHALL BE MADE FROM BLACK HARD RUBBER AND INSTALLED AT THE REAR OF THE REAR BODY FENDERS.

ONE (1)

**SHORE POWER INLET PLATE**

A SHORE-POWER "INLET PLATE" SHALL BE PERMANENTLY AFFIXED AT OR NEAR THE POWER INLET. THE PLATE SHALL INDICATE THE FOLLOWING:

A. TYPE OF LINE VOLTAGE
B. CURRENT RATING IN AMPS
C. POWER INLET TYPE (DC OR AC)

ONE (1)

**KUSSMAUL PUMP PLUS 1000**

A SYSTEM SHALL BE INSTALLED THAT AUTOMATICALLY CHARGES THE CHASSIS AIR AND ELECTRICAL SYSTEM.

AIR COMPRESSOR

THE SMALL ON-BOARD AIR COMPRESSOR SHALL BE MOUNTED ON THE VEHICLE TO MAINTAIN THE AIR PRESSURE IN THE AIR BRAKE SYSTEM WHILE THE VEHICLE IS NOT IN USE. A PRESSURE SWITCH SHALL SENSE THE SYSTEM PRESSURE AND OPERATE THE COMPRESSOR WHENEVER THE PRESSURE DROPS BELOW A PREDETERMINED LEVEL.

SPECIFICATIONS: AIR COMPRESSOR

INPUT:
12-VOLT DC @ 12 AMPS

OUTPUT:
.30 SCFM @ 80 PSI, .35 SCFM @ 60 PSI

MOTOR TYPE:
PERMANENT MAGNET .10 HP

BATTERY CHARGER

THE ON-BOARD AUTOMATIC BATTERY CHARGER SHALL BE MOUNTED IN THE VEHICLE TO MAINTAIN THE CHASSIS ELECTRICAL SYSTEM.

THE PUMP PLUS 1000 CHARGER SENSES BATTERY VOLTAGE DROP AND RECHARGES THE BATTERIES TO FULL CAPACITY. THE STATE OF CHARGE IS INDICATED ON A REMOTELY LOCATED BAR GRAPH DISPLAY WHENEVER POWER IS APPLIED TO THE VEHICLE. THE BATTERY SAVER CONTAINED IN THE PUMP PLUS 1000 CHARGER IS A THREE-(3) AMP POWER SUPPLY WITH A RELAY TO REMOVE THE ACCESSORY LOADS FROM THE BATTERY AND CONNECT THEM TO THE POWER SUPPLY WHEN THE CHARGER IS ENERGIZED WITH AC POWER. THIS SHALL PERMIT THE CHARGER TO RECHARGE THE BATTERIES WITHOUT SUPPLYING THE ACCESSORY LOAD.

A SELECTOR SWITCH SHALL BE PROVIDED ON THE CHARGER TO OPERATE THE COMPRESSOR EITHER AS A DC COMPRESSOR OR AS AN AC COMPRESSOR. IN EITHER SWITCH POSITION, THE COMPRESSOR SHALL OPERATE FROM THE VEHICLE BATTERY. WHEN THE DC POSITION IS SELECTED, THE COMPRESSOR SHALL OPERATE WHENEVER THE PRESSURE SWITCH SENSES LOW SYSTEM PRESSURE SO THAT THE VEHICLES AIR SYSTEM CAN BE CHARGED WHEN THE VEHICLE IS AWAY FROM A 120 VOLT AC SOURCE. WHEN THE DEPARTMENT WISHES TO LIMIT COMPRESSOR OPERATION ONLY WHEN THE VEHICLE IS CONNECTED TO THE 120 VOLT AC SOURCE, THE SWITCH SHOULD BE PLACED IN THE AC POSITION.

SPECIFICATIONS: BATTERY CHARGER

INPUT:
120 VOLTS, 50/60 HZ, 3.5 AMPS

OUTPUT:
12V DC, @ 15 AMPS

VOLTAGE SENSE:
REMOTE, ELECTRONIC

BATTERY SAVER:
OUTPUT VOLTAGE 12V DC OUTPUT CURRENT 3 AMPS

INDICATORS:
POWER - INDICATES INPUT POWER APPLIED
BATTERY SAVER - INDICATES BATTERY SAVER LOAD EXCEEDS 3 AMPS
BAR GRAPH - REMOTELY LOCATED, INDICATES STATE OF CHARGE OF BATTERIES.

ONE (1)

**AUTO-EJECT MALE RECEPTACLE**

THERE SHALL BE PROVIDED ONE-(1) AUTO-EJECT TYPE RECEPTACLE. A SOLENOID WIRED TO THE VEHICLE STARTER IS ENERGIZED WHEN THE ENGINE IS STARTED. THIS INSTANTANEOUSLY DRIVES THE PLUG FROM THE RECEPTACLE. THE RECEPTACLE SHALL BE PROVIDED WITH A WEATHERPROOF COVER. THE COVER SHALL BE SPRING LOADED TO CLOSE, PREVENTING WATER FROM ENTERING WHEN THE SHORELINE IS NOT CONNECTED. THE AUTO EJECT RECEPTACLE SHALL BE MOUNTED IN A LOCATION SPECIFIED BY THE DEPARTMENT AND IS DESIGNED TO ACCEPT A 120 V AC FROM A SHORELINE PLUG. THE UL MAXIMUM ALLOWABLE AMPERAGE DRAW ON RECEPTACLES IS GENERALLY 80% OF THEIR LISTED RATING, FOR EXAMPLE, THE 20-AMP RECEPTACLE SHOULD NOT CARRY MORE THAN 16-AMP CONTINUOUS LOAD. WHEN ADDING THE DIFFERENT AMPERAGE DRAWS OF THE COMPONENTS BEING INSTALLED ON THE CHASSIS, BE SURE TO FIGURE IN WHETHER THE COMPONENTS SHALL DRAW A CONTINUOUS LOAD OR INTERMITTENT LOAD.

| AMP DRAW REFERENCE LIST | |
|---|---|
| KUSSMAUL 1000 CHARGER | 3.5 AMPS |
| KUSSMAUL 1200 CHARGER | 10 AMPS |

| | |
|---|---|
| KUSSMAUL 35/10 CHARGER | 10 AMPS |
| 1000W ENGINE HEATER | 8.33 AMPS |
| 1500 ENGINE HEATER | 12.5 AMPS |
| 120 V AIR COMPRESSOR | 4.2 AMPS |

ONE (1)

**SHORE POWER INLET PLATE**

A SHORE-POWER "INLET PLATE" SHALL BE PERMANENTLY AFFIXED AT OR NEAR THE POWER INLET. THE PLATE SHALL INDICATE THE FOLLOWING:

A. TYPE OF LINE VOLTAGE
B. CURRENT RATING IN AMPS
C. POWER INLET TYPE (DC OR AC)

ONE (1)

**PRE-CONSTRUCTION CONFERENCE - FACTORY**

A PRE-CONSTRUCTION CONFERENCE WILL BE HELD AT THE FACTORY PRIOR TO THE ACTUAL CONSTRUCTION OF THE VEHICLE(S). THE CONFERENCE WILL BE HELD IN THE SUCCESSFUL BIDDERS MANUFACTURING FACILITY WITH THREE (3) REPRESENTATIVES OF THE FIRE DEPARTMENT AND APPROPRIATE REPRESENTATIVES OF THE SUCCESSFUL BIDDER. TRANSPORTATION, LODGING AND MEALS, WILL BE THE RESPONSIBILITY OF THE SUCCESSFUL BIDDER.

ONE (1)

**APPROVAL DRAWING**

PRIOR TO CONSTRUCTION, THE SUCCESSFUL BIDDER SHALL PROVIDE THREE APPROVAL DRAWINGS OF THE APPARATUS FOR THE FIRE DEPARTMENT'S REVIEW. THE DRAWINGS SHALL SHOW SUCH ITEMS AS THE CHASSIS BEING UTILIZED, LIGHTS, HORNS, SIRENS, PUMP PANELS, AND ALL COMPARTMENT LOCATIONS AND DIMENSIONS. THE BLUEPRINT SHALL BE A VISUAL INTERPRETATION OF THE UNIT AS IT IS TO BE CONSTRUCTED. THE BUYING AUTHORITY SHALL SIGN ALL DRAWINGS. ONE PRINT SHALL BE RETAINED BY THE FIRE DEPARTMENT, THE DEALER SHALL RETAIN ONE PRINT, AND ONE PRINT, SHALL BE RETURNED TO THE MANUFACTURER.

ONE (1)

**TILT TABLE TESTING**

IN COMPLIANCE WITH THE LATEST ADDITION OF NFPA 1901, SECTION 4.13.1.1 AND SAE J2180, THIS VEHICLE EXCEEDS THE FOLLOWING "TILT TABLE" PROCEDURES MEASURING THE STATIC ROLLOVER THRESHOLD FOR HEAVY TRUCKS SET FORTH BY THE CURRENT STANDARDS. ALL EQUIPMENT REQUIRED FOR MEETING CURRENT TESTING GUIDELINES SHALL BE LOCATED AT THE MANUFACTURE'S FACILITY AND ACTUAL TESTING PERFORMED AND CERTIFIED BY AN INDEPENDENT THIRD PARTY TESTING COMPANY.

THE VEHICLE SHALL BE TILTED AT A MINIMUM OF 27 DEGREES EVALUATING THE LEVEL OF LATERAL ACCELERATION REQUIRED TO ROLL THE VEHICLE OVER IN A STEADY TURNING SITUATION. TRANSIENT, VIBRATORY, OR DYNAMIC ROLLOVER SITUATIONS ARE NOT SIMULATED BY THIS TEST. THE TEST ACCURACIES ARE ACCEPTED FOR VEHICLES THAT ROLLOVER AT LATERAL ACCELERATION LEVELS BELOW 0.5 G CORRESPONDING TO A TILT TABLE ANGLE OF LESS THAN APPROXIMATELY 27 DEGREES.

IN ADDITION TO RECEIVING A CERTIFICATE OF COMPLIANCE, THE PURCHASER ALSO REQUIRES A WHEEL-END LOADING CERTIFICATION LISTING THE WEIGHT ON EACH WHEEL, WITH THE VEHICLE ON THE TILT TABLE. IN ACCORDANCE WITH NFPA 1901, 4.14.13.3, THE RESULTS OF THE WHEEL-END LOADING SHALL CERTIFY THE VEHICLE, AT THE TIME OF ITS MANUFACTURE, IS IN COMPLIANCE, WITH SIDE-TO-SIDE WEIGHT DISTRIBUTIONS.

ONE (1)

**TREADPLATE BACK OF CAB**

THE ENTIRE BACK WALL OF THE CAB SHALL BE COVERED WITH 1/8" (.125") THICK ALUMINUM TREADPLATE.

ONE (1)

**RADIO POWER CIRCUIT**

A 50 AMP SWITCHED BATTERY POWER CIRCUIT FOR USE AS MAIN POWER TO ACTIVATE THE RADIO SHALL BE SUPPLIED. THE BREAKER SHALL BE MANUAL RESET AND TERMINATE CENTER OF THE DASH.

ONE (1)

**ALTER C/A FRAME -LENGTHEN FRAME ONLY**

THE WHEELBASE OF THE CHASSIS SHALL BE LENGTHENED. THE FRAMERAILS SHALL BE CUT AND A FULL REINFORCEMENT BOLTED TO THE INSIDE OF THE FRAMERAILS.

TWO (2)

**CIGAR LIGHTER**

THERE SHALL BE TWO (2) DASH MOUNTED CIGAR LIGHTER PROVIDED IN THE CHASSIS.

ONE (1)

**GRAVELSHIELD FOR EXTENDED BUMPER**

THERE SHALL BE A GRAVELSHIELD INSTALLED ON THE EXTENDED FRONT BUMPER. THE GRAVELSHIELD SHALL BE CONSTRUCTED OF 1/8" (.125") ALUMINUM TREADPLATE.

ONE (1)

**FRONT BUMPER COMPARTMENT**

THERE SHALL BE A COMPARTMENT INSTALLED IN THE EXTENDED FRONT BUMPER GRAVELSHIELD, CENTER. THE COMPARTMENT SHALL BE CONSTRUCTED OF 1/8" (.125") SMOOTH ALUMINUM PLATE.

ONE (1)

THERE SHALL BE ONE-(1) HINGED ALUMINUM TREADPLATE COMPARTMENT COVER PROVIDED. THE COVER SHALL BE SECURED IN THE CLOSED POSITION WITH A STAINLESS STEEL LATCH.

ONE (1)

**REAR TOW EYES**

THERE SHALL BE TWO-(2) 3/4" THICK REAR TOW EYES CONSTRUCTED OF A-36 STEEL MOUNTED BELOW THE FRAME AT THE REAR OF THE VEHICLE. THE TOW EYES SHALL BE ATTACHED TO STEEL WELDMENTS THAT ARE MOUNTED TO THE APPARATUS. THE EYES SHALL HAVE A MINIMUM DIMENSION OF THREE-(3) INCHES.

ONE (1)

**RADIO INSTALLATION**

THE RADIO SUPPLIED BY THE FIRE DEPARTMENT SHALL BE INSTALLED AS DIRECTED BY THE APPARATUS BODY BUILDER.

THE ITEMS MUST BE SENT TO THE MANUFACTURER IN ADVANCE, AND MARKED WITH NAME AND SHOP ORDER NUMBER FOR IDENTIFICATION.

ONE (1)

**ANTENNA INSTALLATION**

THERE SHALL BE AN ANTENNA SUPPLIED BY THE CUSTOMER AND INSTALLED BY THE APPARATUS BODY BUILDER.

THE ITEMS MUST BE SENT TO THE MANUFACTURER IN ADVANCE, AND MARKED WITH NAME AND SHOP ORDER NUMBER FOR IDENTIFICATION.

ONE (1)

**ON SPOT TIRE CHAINS- INSTALLED**

THE ON SPOT AUTOMATIC TIRE CHAIN OFFERS THE TRACTION OF A SINGLE SET OF CONVENTIONAL SNOW CHAINS AT THE FLIP OF A SWITCH, WITHOUT HAVING TO STOP THE VEHICLE.

AN ELECTRIC SWITCH MOUNTED IN THE CAB PROVIDES 12-VOLTS TO AN AIR SOLENOID MOUNTED ON THE VEHICLE'S FRAMERAIL. COMPRESSED AIR TO THE SOLENOID IS SUPPLIED FROM EITHER THE VEHICLE'S ONBOARD AIR SYSTEM OR A 12-VOLT COMPRESSED AIR KIT.

WHEN THE DASHBOARD SWITCH IS ACTIVATED, THE SOLENOID OPENS ALLOWING COMPRESSED AIR TO ENTER THE AIR CHAMBER AND LOWER THE CHAIN WHEEL SO IT CONTACTS THE INSIDE OF THE TIRE. THE FRICTION BETWEEN THE TIRE AND THE RUBBER-COVERED CHAIN WHEEL CAUSES THE CHAIN WHEEL TO ROTATE, CREATING ENOUGH CENTRIFUGAL FORCE TO FLAIL THE CHAINS OUT IN FRONT OF THE TIRE.

SIX LENGTHS OF CHAIN SPACED AT 60-DEGREE INTERVALS ON THE CHAIN WHEEL ENSURE THAT THERE ARE ALWAYS TWO-(2) CHAINS BETWEEN THE TIRE AND ROAD SURFACE WHETHER YOU ARE ACCELERATING, BRAKING, OR ARE IN A WHEEL LOCKUP CONDITION. THE TRACTION FROM THE CHAIN WHEEL IS OBTAINED IN FORWARD OR REVERSE.

WHEN THE DASHBOARD SWITCH IS TURNED OFF, THE SOLENOID EXHAUSTS THE AIR PROVIDED TO THE CHAIN UNITS AND RETURN SPRINGS IN THE AIR CHAMBERS BRING THE CHAIN WHEELS BACK TO THEIR RESTING POSITION.

ONE (1)

ONE-(1) ROLL-UP COMPARTMENT DOOR SHALL BE INSTALLED ON THE EMS COMPARTMENT.

LATH SECTION:

THE ROLLER SHUTTER LATH, LATCH LATH, GUIDE CHANNELS, WEATHER TOP SEAL, AND ALL EXPOSED ALUMINUM COMPONENTS SHALL BE CONSTRUCTED ENTIRELY OF ALUMINUM EXTRUSION (6000) SERIES. THE FACE PORTION OF THE LATH SHALL BE A MINIMUM OF 1-1/2" AND A MAXIMUM OF 1-5/8" IN WIDTH. THE LATH MATERIAL SHALL MAINTAIN A WALL THICKNESS OF 0.060" WITH A MAXIMUM OVERALL THICKNESS OF .375"

THE CURTAIN FOR THE ROLL-UP DOOR SHALL INCORPORATE A MECHANICAL HINGE THAT SHALL INTERLOCK LATH EXTRUSION TO FORM A COMPLETE CURTAIN. THE MECHANICAL HINGE AREA SHALL REMAIN PROTECTED FROM WEATHER, ROAD DEBRIS OR OTHER EXTERIOR EXPOSURES THROUGH THE INCORPORATION OF A SPECIAL HINGE SEALING SECTION. THIS SEALING SECTION SHALL BE FLEXIBLE IN DESIGN AND CONSTRUCTED OF A FLEXIBLE ELASTOMER MATERIAL (ETHYLENE PROPYLENE DIENE MONOMER) RUBBER. SEALING SECTIONS OF ANY OTHER TYPE SHALL NOT BE ACCEPTABLE. THIS CONSTRUCTION SHALL INSURE THAT A FLEXIBLE WEATHER RESISTANT SEAL SHALL BE MAINTAINED. THE INTERIOR SURFACE OF ROLL-UP LATH ASSEMBLY SHALL BE SMOOTH IN FINISH.

GUIDE CHANNEL AND SEAL:

THE EXTRUDED ALUMINUM GUIDE CHANNELS SHALL HAVE THE ABILITY OF BEING FASTENED TO BODY WITH THE INCORPORATION OF RAISED HEAD FASTENERS INSIDE THE TRACKING AREA WITH NO INTERFERENCE IN THE OPERATION OF THE DOOR. GUIDE CHANNELS SHALL BE FULLY INDEPENDENT OF EACH OTHER AND NOT ATTACHED IN ANY WAY TO THE COUNTERBALANCE MOUNTING MECHANISM. THE GUIDE CHANNELS SHALL INCORPORATE A WEATHER SEAL ALSO CONSTRUCTED OF E.P.D.M. RUBBER AND BOTH CHANNEL AND SEALING SECTION SHALL BE INSTALLED AS ONE COMPONENT. THERE SHALL BE NYLON FLOCKING APPLIED TO THE OPPOSING SURFACE TO THE ROLL-UP DOOR TO ENHANCE OPERATION AND ELIMINATE ANY PERIODIC MAINTENANCE.

TOP SEAL / DRIP RAIL:

THE DRIP RAIL SHALL BE CONSTRUCTED OF 6000 SERIES ALUMINUM AND HAVE A PROTECTIVE ANODIZED FINISH. THE OVERALL HEIGHT SHALL BE 1.375" WITH A MAXIMUM ALUMINUM WIDTH NOT TO EXCEED .437". THE DRIP RAIL SHALL HAVE A PROVISION TO SECURE TOP SEAL FOR THE ROLL-UP DOOR. THE TOP SEAL SHALL NOT BE ABLE TO BE SEPARATED FROM DRIP RAIL BY ANY WAY OTHER THAN MEANS OF INSTALLATION.

ONE (1)

LIGHTING

ONE (1) TRUCK-LITE MODEL 80351 5" DIAMETER LIGHT SHALL BE INSTALLED IN THE ROOF OF THE CABINET AND OPERATED BY AN AUTOMATIC DOOR SWITCH.

ONE (1)

SHELF

ONE (1) VERTICALLY ADJUSTABLE SHELF SHALL BE INSTALLED IN THE EMS CABINET. THE SHELF SHALL BE CONSTRUCTED OF SMOOTH ALUMINUM AND HAVE A 2" LIP AT THE FRONT AND REAR OF THE SHELF.

ONE (1)

**12V POWER SUPPLY**

THERE SHALL BE 12-VOLT POWER SUPPLY INSTALLED IN THE EMS COMPARTMENT. LOCATION TO BE DETERMINED BY THE FIRE DEPARTMENT.

ONE (1)

**EMS COMPARTMENT**

ONE (1) EMS COMPARTMENT CONSTRUCTED OF 1/8" SMOOTH ALUMINUM WILL BE MOUNTED IN THE CAB. THIS CABINET WILL BE INSTALLED REAR FACING BEHIND THE OFFICER'S SEAT AND FINISHED WITH A GRAY SPAY ON POLYURETHANE LINER.

THE TOP OF THE COMPARTMENT SHALL HAVE AN ADDITIONAL STORAGE AREA. THE COMPARTMENT SHALL BE APPROXIMATELY 27" W X 20" D X 50" H

ONE (1)

**MDT INSTALLATION**

THE CUSTOMER SUPPLIED MDT SHALL BE INSTALLED AT LOCATION AS DETERMINED AND APPROVED AT THE PRE CONSTRUCTION CONFERENCE.

ONE (1)

**COMPARTMENT- UNDER OFFICER SEAT**

THERE SHALL BE A COMPARTMENT FABRICATED AND INSTALLED UNDER THE OFFICER SEAT. THE DOOR SHALL OPEN TO THE FORWARD SECTION OF THE COMPARTMENT. EXACT LAYOUT AND DESIGN SHALL BE DETERMINED BY ENGINEERING AND APPROVED BY THE PURCHASER

ONE (1)

**PUMP SYSTEM SINGLE STAGE - WATEROUS CSU**

PUMP ASSEMBLY

THE PUMP SHALL BE OF SINGLE STAGE CONSTRUCTION AND COMPLY WITH ALL APPLICABLE REQUIREMENTS OF THE LATEST STANDARDS FOR AUTOMOTIVE FIRE APPARATUS OF THE NATIONAL FIRE PROTECTION ASSOCIATION.

THE PUMP SHALL BE FREE FROM OBJECTIONABLE PULSATION AND VIBRATION UNDER ALL NORMAL OPERATING CONDITIONS.

THE PUMP BODY SHALL BE CLOSED-GRAINED GRAY IRON AND MUST BE HORIZONTALLY SPLIT IN TWO SECTIONS FOR EASY REMOVAL OF THE ENTIRE IMPELLER SHAFT ASSEMBLY, AND DESIGNED FOR COMPLETE SERVICING FROM THE BOTTOM OF THE TRUCK WITHOUT DISTURBING SETTING OF THE PUMP IN THE CHASSIS OR APPARATUS PIPING, WHICH IS CONNECTED TO THE PUMP. PUMP BODY HALVES SHALL BE BOLTED TOGETHER ON A SINGLE HORIZONTAL FACE TO MINIMIZE LEAKAGE AND FACILITATE REASSEMBLY.

THE DISCHARGE MANIFOLD SHALL BE CAST AS AN INTEGRAL PART OF THE PUMP BODY ASSEMBLY. THE MANIFOLD SHALL PROVIDE AT LEAST THREE FULL, 3-1/2" OPENINGS FOR FLEXIBILITY AND MAXIMUM EFFICIENCY. THE OUTLETS PROVIDED SHALL BE ONE ON THE RIGHT SIDE OF THE PUMP BODY, ONE ON THE LEFT SIDE OF THE PUMP BODY AND ONE DIRECTLY ON TOP OF THE MANIFOLD.

THE IMPELLER SHALL BE BRONZE WITH DOUBLE SUCTION INLETS, ACCURATELY BALANCED (MECHANICALLY AND HYDRAULICALLY), OF MIXED FLOW DESIGN WITH REVERSE-FLOW, LABYRINTH-TYPE, AND UTILIZE WEAR RINGS THAT RESIST WATER BYPASS AND LOSS OF EFFICIENCY DUE TO WEAR.

THE WEAR RINGS ARE TO BE BRONZE, AND SHALL BE EASILY REPLACEABLE TO RESTORE ORIGINAL PUMP EFFICIENCY AND ELIMINATE THE NEED FOR REPLACING THE ENTIRE PUMP CASING DUE TO WEAR.

THE IMPELLER SHAFT SHALL BE STAINLESS STEEL, ACCURATELY GROUND TO SIZE, AND SUPPORTED AT EACH END BY OIL OR GREASE-LUBRICATED ANTI-FRICTION BALL BEARINGS FOR RIGID AND PRECISE SUPPORT. BEARINGS SHALL BE PROTECTED FROM WATER AND SEDIMENT BY SUITABLE STUFFING BOXES, FLINGER RINGS, AND OIL SEALS. THE IMPELLER SHAFT SHALL BE OF TWO-PIECE CONSTRUCTION SEPARABLE BETWEEN THE PUMP AND PUMP TRANSMISSION TO ALLOW TRUE SEPARATION OF THE TRANSMISSION FROM THE PUMP WITHOUT DISASSEMBLY OF EITHER COMPONENT. NO! SLEEVE TYPE BEARINGS SHALL BE USED.

THE PUMP TRANSMISSION SHALL BE RIGIDLY ATTACHED TO THE PUMP BODY ASSEMBLY AND BE OF THE LATEST DESIGN INCORPORATING A HIGH STRENGTH, INVOLUTED, TOOTH-FORM HY-VO CHAIN DRIVE AND DRIVEN SPROCKETS CAPABLE OF OPERATING AT HIGH SPEEDS TO PROVIDE SMOOTH, QUITE TRANSFER OF POWER. A FREE SLIDING COLLAR SHALL ACCOMPLISH THE SHIFT ENGAGEMENT AND SHALL INCORPORATE AN INTERNAL LOCKING MECHANISM TO INSURE THAT COLLAR SHALL BE MAINTAINED IN ROAD OR PUMP POSITION.

FOR CHASSIS EQUIPPED WITH AUTOMATIC TRANSMISSIONS, THE PUMP TRANSMISSION DRIVELINE SHALL HAVE A TORQUE-RATING EQUAL TO OR GREATER THAN THE MAXIMUM NET ENGINE TORQUE MULTIPLIED TIMES THE FIRST GEAR RATIO AND TORQUE CONVERTER RATIO.

THE SUCTION FITTINGS SHALL INCLUDE REMOVABLE, DIE CAST, ZINC SCREENS THAT ARE DESIGNED TO PROVIDE CATHODIC PROTECTION FOR THE PUMP, THUS REDUCING CORROSION IN THE PUMP.

A 3" CLAPPER CHECK VALVE SHALL BE INSTALLED BETWEEN THE SUCTION SIDE OF THE PUMP AND THE TANK-TO-PUMP VALVE. THIS 3" CLAPPER VALVE SHALL ELIMINATE THE POSSIBILITY OF A PRESSURE SURGE EXPANDING THE WATER TANK.

PUMP SYSTEM SHALL UTILIZE AN INTEGRAL DISCHARGE MANIFOLD SYSTEM THAT ALLOWS A DIRECT FLOW OF WATER TO ALL DISCHARGE VALVES.

THERE SHALL BE ONE-(1) PUMP PANEL MOUNTED VERNIER THROTTLE USED TO CONTROL ENGINE RPM.

THE PUMP SYSTEM AND PIPING SHALL BE ENGINEERED FOR SIDE MOUNT OPERATIONS. THE RELIEF VALVE CONTROL AND OTHER CONTROL MECHANISMS SHALL BE LOCATED ON THE SIDE MOUNT OPERATOR'S CONTROL PANEL.

ONE (1)

**PACKING GLANDS**

THE STUFFING BOXES SHALL BE INTEGRAL WITH THE PUMP BODY AND BE EQUIPPED WITH TWO-PIECE GLANDS TO PERMIT ADJUSTMENT OR REPLACEMENT OF PACKING WITHOUT DISTURBING THE PUMP.

LANTERN RINGS SHALL BE LOCATED AT INNER ENDS OF STUFFING BOXES SO THAT ALL RINGS OF PACKING CAN BE REMOVED WITHOUT REMOVAL OF THE LANTERN RINGS. WATER SHALL BE FED INTO STUFFING BOX LANTERN RINGS FOR PROPER LUBRICATION AND COOLING WHEN THE PUMP IS OPERATING.

ONE (1)

**PUMP WARRANTY**

THE WATEROUS PUMP SHALL HAVE A PUMP WARRANTY TO INCLUDE PARTS FOR A PERIOD OF FIVE-(5) YEARS.

ONE (1)

**PUMP MOUNTING**

THERE SHALL BE EXTRA HEAVY-DUTY PUMP MOUNTING BRACKETS FURNISHED. THESE SHALL BE BOLTED TO THE FRAME RAILS IN SUCH A POSITION TO ALIGN THE PUMP SO THAT THE ANGULAR VELOCITY OF THE DRIVELINE JOINTS SHALL BE THE SAME ON EACH END OF THE DRIVESHAFT. THIS SHALL ASSURE FULL CAPACITY PERFORMANCE WITH A MINIMUM OF VIBRATION.

ONE (1)

**MANUALS**

THERE SHALL BE TWO-(2) COPIES OF PUMP MANUALS PROVIDED TO THE DEPARTMENT.

ONE (1)

**PUMP PANEL TAGS - COLOR CODED - METAL**

THE PUMP PANEL TAGS FOR ALL DISCHARGES, GAUGES, AND CONTROLS SHALL BE COLOR-CODED AND MADE OUT OF METAL. ALL GAUGES AND CONTROLS SHALL BE PROPERLY IDENTIFIED WITH COLOR-CODED METAL PUMP PANEL TAGS. THE COLOR-CODED TAGS SHALL BE AFFIXED WITH 3M INDUSTRIAL ADHESIVE.

ONE (1)

**U.L. TEST POINTS**

AN UNDERWRITERS LABORATORIES APPROVED ENGINE COUNTER SHALL BE LOCATED ON THE PUMP PANEL TO PROVIDE A MEANS TO CERTIFY THE TACHOMETER. IN ADDITION, TWO-(2) U.L. TEST PLUGS SHALL BE PUMP PANEL MOUNTED FOR TESTING OF VACUUM AND PRESSURES.

ONE (1)

**U.L. CERTIFICATION (1500 GPM)**

THE VEHICLE SHALL BE THIRD PARTY TESTED AND CERTIFIED BY UNDERWRITERS LABORATORIES, INC. UL TESTING IS RECOGNIZED AS A LEADING, THIRD PARTY, "PRODUCT SAFETY CERTIFICATION" ORGANIZATION FOR OVER 100 YEARS. UL HAS SERVED ON THE NFPA (NATIONAL FIRE PROTECTION ASSOCIATION) TECHNICAL COMMITTEE FOR OVER THIRTY-(30) YEARS.

THE TESTING ORGANIZATION MUST MEET THE FOLLOWING MINIMUM REQUIREMENTS:

- MUST BE NATIONALLY RECOGNIZED TESTING LABORATORY RECOGNIZED BY OSHA
- MUST COMPLY WITH THE ASTM (AMERICAN SOCIETY FOR TESTING MATERIALS) STANDARD E543 "DETERMINING THE QUALIFICATIONS FOR NONDESTRUCTIVE TESTING AGENCIES"
- MUST HAVE MORE THAN FORTY (40) YEARS OF AUTOMOTIVE FIRE APPARATUS SAFETY TESTING EXPERIENCE AND MORE THAN FIFTEEN (15) YEARS OF FACTORY AERIAL DEVICE TESTING AND CERTIFICATION EXPERIENCE
- MUST NOT REPRESENT, BE ASSOCIATED WITH, OR IN THE MANUFACTURE OR REPAIR OF AUTOMOTIVE FIRE APPARATUS.
- MUST PROVIDE PROOF OF TEN (10) MILLION DOLLARS IN EXCESS LIABILITY INSURANCE FOR BODILY INJURY AND PROPERLY DAMAGE COMBINED

THE PUMP SHALL MEET AND PERFORM THE FOLLOWING TEST TO RECEIVE A U.L. CERTIFICATION.

- 100% OF RATED CAPACITIES AT 150 PSI NET PUMP PRESSURE
- 100% OF RATED CAPACITIES AT 165 PSI NET PUMP PRESSURE
- 70% OF RATED CAPACITIES AT 200 PSI NET PUMP PRESSURE
- 50% OF RATED CAPACITIES AT 250 PSI NET PUMP PRESSURE

ONE (1)

**PUMP CERTIFICATION TEST PLATE**

A PERMANENTLY AFFIXED PLATE SHALL BE INSTALLED AT THE PUMP OPERATOR'S PANEL. IT SHALL PROVIDE THE RATED DISCHARGE AND PRESSURES TOGETHER WITH THE SPEED OF THE ENGINE AS DETERMINED BY THE CERTIFICATION TEST FOR EACH UNIT. IT SHALL ALSO PROVIDE THE POSITION OF THE PARALLEL/SERIES PUMP USED AND THE NO LOAD GOVERNED SPEED OF THE ENGINE AS STATED BY THE ENGINE MANUFACTURER ON A CERTIFIED BRAKE HORSEPOWER CURVE.

A LABEL SHALL BE PROVIDED ON THE PUMP OPERATOR'S PANEL THAT STATES THE FOLLOWING:

WARNING: DEATH OR SERIOUS INJURY MIGHT OCCUR IF PROPER OPERATING PROCEDURES ARE NOT FOLLOWED. THE PUMP OPERATOR AS WELL AS INDIVIDUALS CONNECTING SUPPLY OR DISCHARGE HOSES TO THE APPARATUS MUST BE FAMILIAR WITH WATER HYDRAULICS HAZARDS AND COMPONENT LIMITATIONS.

ONE (1)

**6" STEAMER INLET**

ONE-(1) 6" STEAMER INLET SHALL BE PROVIDED, ON THE LEFT SIDE OF THE PUMP. THE INLET SHALL BE COMPLETE WITH LONG HANDLE CHROME CAP AND 6" SCREEN.

ONE (1)

**6" STEAMER INLET W/WATEROUS - MONARCH MANUAL VALVE**

ONE-(1) 6" EXTRA SHORT INTAKE WITH A WATEROUS MONARCH VALVE (MANUAL) SHALL BE INSTALLED ON THE RIGHT SIDE OF THE PUMP. THIS PACKAGE INCLUDES AN INTAKE BUTTERFLY VALVE, NIPPLE, AND INTEGRAL RELIEF VALVE MOUNTING PAD. THIS PACKAGE IS DESIGNED TO FIT BEHIND THE PUMP PANEL. THE INLET SHALL HAVE A LONG HANDLE CHROME CAP AND SCREEN.

THREE DIFFERENT LENGTHS WITH OR WITHOUT FRONT INTAKE PROVISION:

76-1/4" (INTAKE END TO INTAKE END)
78-1/4" (INTAKE END TO INTAKE END)
80-1/4" (INTAKE END TO INTAKE END)

ONE (1)

**2-1/2" LEFT SIDE SUCTION**

ONE (1) 2-1/2" BRASS VALVE SHALL BE INSTALLED ON THE LEFT SIDE OF THE PUMP PANEL. THE VALVE SHALL BE FIXED PIVOT DESIGN, PLUMBED TO THE SUCTION SIDE OF THE PUMP WITH 2-1/2" PIPING. THE CONTROL HANDLE SHALL BE LOCATED ON THE SIDE THE SUCTION VALVE. THE VALVE SHALL COME EQUIPPED WITH A CHROME PLUG, CHAIN, BRASS INLET STRAINER, A 2-1/2" NST CHROME INLET SWIVEL AND A 3/4" BLEEDER/DRAIN VALVE.

A WARNING PLATE SHALL BE PERMANENTLY AFFIXED IN A LOCATION IN PROXIMITY TO THE SUCTION INLET. THE PLATE SHALL STATE:

"WARNING - SERIOUS INJURY OR DEATH COULD OCCUR IF INLET IS SUPPLIED BY A PRESSURIZED SOURCE WHEN THE VALVE IS CLOSED".

ONE (1)

**WATEROUS DISCHARGE RELIEF VALVE**

THERE SHALL BE ONE-(1) WATEROUS MODEL 82261-1E, DISCHARGE RELIEF VALVE INSTALLED IN THE PUMP PANEL. THE RELIEF VALVE IS A TWO-UNIT SYSTEM. A PANEL MOUNTED PILOT VALVE ASSEMBLY CONTROLS OPERATION OF THE MAIN RELIEF VALVE. THE PILOT VALVE HAS TWO CONTROLS; ONE TO SELECT THE DESIRED OPERATING PRESSURE, THE OTHER TO SWITCH THE RELIEF VALVE IN OR OUT OF OPERATION.

ONE (1)

**STANDARD MASTER GAUGES**

ONE-(1) 4-1/2" MASTER SUCTION AND ONE (1) 4-1/2" MASTER DISCHARGE GAUGE SHALL BE PUMP PANEL MOUNTED. THESE COMPOUND GAUGES SHALL BE FILLED WITH A LIQUID SILICONE SOLUTION TO ASSURE VISUAL READING TO WITHIN 1% ACCURACY. THIS LIQUID SILICONE FEATURE ELIMINATES THE NEED OF SNUBBER VALVES AND REDUCES THE CHANCE OF CONDENSATION FORMING ON THE INNER FACE OF THE GAUGE.

ONE (1)

**ENGINE GAUGE PACKAGE**

A GAUGE PACKAGE SHALL BE SUPPLIED AT THE PUMP OPERATOR'S PANEL TO MONITOR THE VEHICLE'S ENGINE.

ONE (1)

**PUMP PANEL TACHOMETER**

A 3" TACHOMETER SHALL BE MOUNTED ON PUMP PANEL INDICATING ENGINE REVOLUTIONS PER MINUTE.

ONE (1)

**PUMP PANEL VOLTMETER**

THERE SHALL BE A 2" DIAMETER VOLTMETER GAUGE MOUNTED ON THE PUMP PANEL. THE METER SHALL READ FROM 8 VOLTS TO 16 VOLTS. THE METER SHALL BE MOUNTED IN A WELL-LIGHTED AREA FOR NIGHT OPERATION.

ONE (1)

**PUMP PANEL ENGINE OIL PRESSURE GAUGE**

A 2" WEATHERPROOF OIL PRESSURE GAUGE SHALL BE MOUNTED ON PUMP PANEL INDICATING ENGINE OIL PRESSURE.

ONE (1)

**PUMP PANEL ENGINE WATER TEMPERATURE GAUGE**

A 2" WEATHERPROOF WATER TEMPERATURE GAUGE SHALL BE MOUNTED ON THE PUMP PANEL INDICATING ENGINE TEMPERATURE.

ONE (1)

**OIL PRESSURE/WATER TEMPERATURE ALARMS**

THERE SHALL BE AN AUDIBLE ALARM, WITH INDICATOR LIGHTS, MOUNTED BEHIND THE PUMP OPERATOR'S PANEL. THE ALARM SHALL BE CONNECTED TO THE OIL PRESSURE AND WATER TEMPERATURE GAUGES TO WARN OF A LOW OIL PRESSURE OR HIGH WATER TEMPERATURE CONDITION EXIST.

ONE (1)

**PRIMER - ELECTRIC WATEROUS**

A WATEROUS MODEL 2146, 12-VOLT POSITIVE DISPLACEMENT VANE PRIMER SHALL BE INSTALLED WITH AN OIL RESERVOIR TANK. THE ELECTRICALLY DRIVEN PRIMER CONFORMS TO THE STANDARDS OUTLINED IN THE CURRENT NFPA PAMPHLET. THE CONTROL SHALL BE PUMP PANEL MOUNTED TO OPERATE THE

PRIMING VALVE AND START THE PRIMING MOTOR. DURING OPERATION, THE PRIMER SHALL AUTOMATICALLY LUBRICATE FROM ITS OWN FIVE-QUART RESERVOIR.

ONE (1)

**AKRON DISCHARGE AND SUCTION VALVES**

THERE SHALL BE AKRON 8800 SERIES VALVES USED ON ALL DISCHARGES AND SUCTION INLETS. A POLISHED ALUMINUM TRIM RING SHALL BE PROVIDED AROUND ALL INLETS AND DISCHARGES.

ONE (1)

**STANDARD GAUGES**

THE DISCHARGES SHALL HAVE A 2-1/2" WHITE-FACED, SILICONE FILLED PRESSURE GAUGE INSTALLED ON THE OPERATOR'S PANEL TO INDICATE PRESSURES FROM 0 TO 600 PSI.

ONE (1)

ALL SUCTION AND PRESSURE GAUGE BEZELS SHALL BE STANDARD FINISH.

ONE (1)

**SUCTION & DISCHARGE PLUMBING**

ALL SUCTION AND DISCHARGE LINES OF 2" OR LARGER, SHALL BE CONSTRUCTED OF A MINIMUM OF SCHEDULE 40 GALVANIZED STEEL PIPE. WHERE VIBRATION OR CHASSIS FLEXING MAY DAMAGE OR LOOSEN PIPING, THE PIPE SHALL BE EQUIPPED WITH VICTAULIC OR ROUSTABOUT COUPLINGS. THE ENTIRE DISCHARGE AND INTAKE PIPING SYSTEM, VALVES, DRAIN COCKS AND LINES, INTAKE AND OUTLET CLOSURES EXCLUDING THE TANK FILL AND TANK TO PUMP LINES ON THE TANK SIDE OF THE VALVES SHALL BE DESIGNED FOR 500 PSIG. ALL SUCTION INLETS AND DISCHARGE OUTLETS SHALL BE EQUIPPED WITH NATIONAL STANDARD THREADS (NST) UNLESS OTHERWISE STATED.

ONE (1)

THERE SHALL BE A KOCHEK MODEL SKE-R, 6" FNST SWIVEL X 5" STORZ ELBOW WITH CAP PROVIDED WITH THE APPARATUS.

ONE (1)

KOCHEK #CC507, 5" STORZ CAP

ONE (1)

**TANK TO PUMP**

THE TANK TO PUMP VALVE SHALL BE 3" INLINE, INSTALLED BETWEEN THE WATER TANK AND THE PUMP. THE VALVE SHALL BE A QUARTER TURN BALL TYPE, FIXED PIVOT DESIGN AND BE CONSTRUCTED OF BRONZE. THE CONTROL SHALL BE A CHROME PUSH/PULL LOCKING "T" TYPE HANDLE AND INSTALLED ON THE LEFT PUMP PANEL.

ONE (1)

**MASTER DRAIN**

THE MASTER DRAIN SHALL HAVE THE CAPACITY TO DRAIN THE PUMP. THE DRAIN SHALL BE RECESSED BELOW THE SIDE PUMP PANEL, WITH THE CONTROL LOCATED UNDER THE SIDE RUNNING BOARDS THAT ARE PROPERLY LABELED. THE WATER DISCHARGED FROM THE DRAIN SHALL BE ROUTED TO DRAIN BELOW THE CHASSIS FRAME RAILS.

ONE (1)

**RELIEF VALVE - ELKHART 40**

THERE SHALL BE AN ELKHART MODEL 40 SUCTION SIDE RELIEF VALVE PROVIDED ON THE PUMP SYSTEM. THE RELIEF VALVE SHALL BE PLUMBED WITH HIGH-PRESSURE RUBBER HOSE, STAINLESS STEEL CONNECTIONS AND TERMINATE WITHIN VIEW OF THE OPERATOR'S PANEL.

ONE (1)

**ENGINE COOLER**

THE ENGINE COOLER SHALL BE INSTALLED IN-LINE FROM THE DISCHARGE SIDE OF THE PUMP, AND INSTALLED IN THE ENGINE COOLING SYSTEM. THERE SHALL BE A 1/2", QUARTER TURN VALVE INSTALLED THRU THE PUMP PANEL AND SHALL BE CLEARLY LABELED.

ONE (1)

**PUMP COOLER**

THE PUMP SHALL HAVE A 3/8" LINE INSTALLED FROM THE PUMP DISCHARGE, TO THE WATER TANK TO COOL THE PUMP DURING LONG PERIODS OF PUMPING WHEN WATER IS NOT BEING DISCHARGED. THE PUMP COOLER SHALL BE CONTROLLED FROM THE PUMP OPERATORS PANEL BY A 3/8" VALVE CONSISTING OF A CAST BRONZE BODY WITH 1/4 TURN CHROME PLATED BRONZE BALL, REINFORCED TEFLON SEALS, AND BLOW-OUT-PROOF STEM RATED TO 600 PSI.

THE VALVE SHALL BE INSTALLED THRU THE PUMP PANEL AND CLEARLY LABELED.

ONE (1)

**PUMP SHIFT**

AN AIR OPERATED PUMP SHIFT SHALL BE INSTALLED IN THE CHASSIS CAB TO ENGAGE THE FIRE PUMP. PROVISIONS SHALL BE MADE FOR PLACING THE PUMP DRIVE SYSTEM IN OPERATION USING CONTROLS AND SWITCHES THAT ARE CLEARLY IDENTIFIED AND WITHIN CONVENIENT REACH OF THE OPERATOR WHILE IN THE CAB.

A GREEN INDICATOR LIGHT SHALL BE INSTALLED ON THE CAB DASH AND LABELED "PUMP ENGAGED."

WHERE AN AUTOMATIC CHASSIS TRANSMISSION IS PROVIDED, A GREEN INDICATOR LIGHT IN THE DRIVING COMPARTMENT AND A GREEN INDICATOR LIGHT LOCATED AT THE PUMP OPERATOR'S POSITION SHALL BE PROVIDED AND SHALL BE ENERGIZED WHEN BOTH THE PUMP SHIFT HAS BEEN COMPLETED AND THE CHASSIS TRANSMISSION IS ENGAGED IN PUMP GEAR.

THE LIGHT IN THE DRIVING COMPARTMENT SHALL BE LABELED "OK TO PUMP". THE LIGHT ON THE PUMP OPERATOR SHALL BE POSITIONED ADJACENT TO AND PREFERABLY ABOVE THE THROTTLE CONTROL AND SHALL BE LABELED "WARNING": DO NOT OPEN THROTTLE UNLESS LIGHT IS ON." THE GREEN LIGHT ON THE PUMP OPERATOR PANEL SHALL BE ENERGIZED WHEN THE PUMP IS ENGAGED, THE TRANSMISSION IS IN THE DRIVE POSITION, AND THE PARKING BRAKE IS SET.

ONE (1)

**SEPARATE PUMP MODULE- ALUMINUM**

THE PUMP MODULE SHALL BE A SELF-SUPPORTED STRUCTURE MOUNTED INDEPENDENTLY FROM THE BODY AND CHASSIS CAB. THE PUMP MODULE SHALL BE CONSTRUCTED ENTIRELY OF EXTRUSIONS AND ALUMINUM PLATE AND SHALL BE BOLTED TO THE CHASSIS FRAMERAILS. THE FRAMEWORK SHALL BE FORMED FROM BEVELED ALUMINUM ALLOY EXTRUSIONS AND ELECTRICALLY SEAM WELDED BOTH INTERNALLY AND EXTERNALLY AT EACH JOINT USING 5356 ALUMINUM ALLOY WELDING WIRE. THE MAIN FRAMEWORK SHALL BE CONSTRUCTED OF 3.00 X 3.50, 6063-T6 ALUMINUM EXTRUSION. ALUMINUM ANGLE SHALL BE WELDED SUCH THAT A RECESSED DURANODIC ALUMINUM PUMP PANEL CAN BE MOUNTED INSIDE THE EXTRUSION PERIMETER. THE PUMP MODULE DESIGN MUST ALLOW NORMAL FRAME DEFLECTION WITHOUT IMPOSING STRESS ON THE PUMP MODULE STRUCTURE OR SIDE RUNNING BOARDS.

ONE (1)

**TANK FILL**

THERE SHALL BE A 2" PUMP TO TANK FILL LINE INSTALLED, WITH A 2" INLINE BRONZE VALVE, A 2" HIGH-PRESSURE FLEXIBLE HOSE AND TESTED TO 1200 PSI. THE VALVE SHALL BE CONTROLLED AT THE SIDE PUMP PANEL WITH A CHROME PUSH/PULL LOCKING "T" HANDLE.

ONE (1)

**1-1/2" FRONT JUMP LINE**

THERE SHALL BE A 1-1/2" FRONT JUMP LINE INSTALLED AT THE FRONT BUMPER. THE 2" INLINE VALVE SHALL BE CONTROLLED AT THE SIDE PUMP PANEL WITH A CHROME PUSH/PULL LOCKING "T" HANDLE. THE PLUMBING SHALL BE FLEXIBLE HIGH-PRESSURE HOSE, TESTED TO 1200 PSI, USING STAINLESS STEEL COUPLINGS. THERE SHALL BE A 2" NPT X 1-1/2" NST ELBOW.

SWIVEL LOCATION: INSIDE COMPARTMENT BACK WALL PASSENGER SIDE

ONE (1)

**2-1/2" SINGLE CROSSLAY**

ONE-(1) PRE-CONNECTED CROSSLAY COMPARTMENTS SHALL BE PROVIDED ABOVE THE SIDE MOUNT OPERATOR'S PANEL EACH ACCOMMODATING 200' OF 2-1/2" DOUBLE JACKET HOSE, WITH STAINLESS STEEL NYLON GUIDED ROLLERS INSTALLED AT EACH END, AND STAINLESS STEEL SCUFF PLATES AROUND THE PERIMETER OF THE CROSSLAYS PROTECTING THE PAINTED SURFACES.

A MECHANICAL SWIVEL SHALL BE PROVIDED FOR EACH CROSSLAY ALLOWING DEPLOYMENT OF THE FIRE HOSE IN EITHER DIRECTION. ONE-(2) 2-1/2" BRONZE VALVES WITH HIGH-PRESSURE FLEXIBLE HOSE, WITH STAINLESS STEEL COUPLINGS SHALL BE PROVIDED, AND TESTED TO 1200 PSI AND PUSH/PULL LOCKING "T" HANDLE CONTROLLED FROM THE OPERATOR'S PANEL.

EACH DISCHARGE IS EQUIPPED WITH A QUARTER-TURN DRAIN VALVE.

ONE (1)

**1-3/4" DOUBLE SPEEDLAY**

TWO-(2) PRE-CONNECTED SPEEDLAY COMPARTMENTS SHALL BE PROVIDED AHEAD OF THE SIDE MOUNT OPERATOR'S PANEL EACH ACCOMMODATING 200' OF 1-3/4" DOUBLE JACKET HOSE, WITH STAINLESS STEEL NYLON GUIDED ROLLERS INSTALLED AT EACH END, AND STAINLESS STEEL SCUFF PLATES AROUND THE PERIMETER OF THE CROSSLAYS PROTECTING THE PAINTED SURFACES.

A MECHANICAL SWIVEL SHALL BE PROVIDED FOR EACH CROSSLAY ALLOWING DEPLOYMENT OF THE FIRE HOSE IN EITHER DIRECTION. TWO-(2) 2" BRONZE VALVES WITH HIGH-PRESSURE FLEXIBLE HOSE, WITH STAINLESS STEEL COUPLINGS SHALL BE PROVIDED, AND TESTED TO 1200 PSI AND PUSH/PULL LOCKING "T" HANDLE CONTROLLED FROM THE OPERATOR'S PANEL.

EACH DISCHARGE IS EQUIPPED WITH A QUARTER-TURN DRAIN VALVE.

ONE (1)

**SPEEDLAY TRAY**

TWO-(2) HOSE TRAYS SHALL BE HELD IN PLACE BY HORIZONTAL BULKHEADS AT EACH END OF THE SPEEDLAY COMPARTMENTS. THE TRAYS SHALL BE CONSTRUCTED OF 3/16" SMOOTH ALUMINUM. THE REMOVABLE TRAYS SHALL HAVE HANDLES AT EACH END FOR EASE OF HANDLING.

ONE (1)

**SPEEDLAY COVERS**

THERE SHALL BE TWO-(2) HYPALON COVERS PROVIDED WITH THE APPARATUS EACH SIDE.

ONE (1)

THE HYPALON END FLAPS SHALL BE SECURED AT THE BOTTOM USING TWO VELCRO STRAPS ON EACH SIDE ,TOTAL OF FOUR.. THE COVERS SHALL COMPLETELY PROTECT AND PREVENT THE HOSE FROM INADVERTENTLY DEPLOYING DURING NORMAL OPERATION.

THE COVER SHALL MEET THE TIA 03-1 NFPA REQUIREMENT.

ONE (1)

THE END FLAPS SHALL BE RED IN COLOR.

ONE (1)

**2-1/2" SINGLE DRY CROSSLAY**

ONE-(1) 2-1/2" DRY CROSSLAY SHALL BE INSTALLED BEHIND TOP MOUNT PUMP PANEL. THE CROSSLAY SHALL HOLD 200' OF 2-1/2" DOUBLE JACKET FIRE HOSE. STAINLESS STEEL ROLLERS WITH NYLON GUIDES SHALL BE MOUNTED ON THE CROSSLAY. STAINLESS STEEL SCUFF PLATES SHALL BE INSTALLED AROUND THE CROSSLAY OPENINGS TO PROTECT THE PAINTED SURFACES. THE HYPALON END FLAPS SHALL BE SECURED AT THE BOTTOM USING TWO VELCRO STRAPS ON EACH SIDE ,TOTAL OF FOUR.. THE COVERS SHALL COMPLETELY PROTECT AND PREVENT THE HOSE FROM INADVERTENTLY DEPLOYING DURING NORMAL OPERATION. THE COVER SHALL MEET THE TIA 03-1 NFPA REQUIREMENT.

ONE (1)

**2-1/2" LEFT SIDE DISCHARGES**

TWO 2-1/2" DISCHARGES WITH BRONZE VALVES SHALL BE LOCATED ON THE LEFT SIDE PANEL. THE VALVES SHALL BE A QUARTER TURN BALL TYPE AND FIXED PIVOT DESIGN TO ALLOW EASY OPERATION AT ALL PUMP PRESSURES. THE 2-1/2" OUTLETS SHALL BE EQUIPPED WITH CHROME PLATED 30-DEGREE ELBOWS TERMINATING WITH 2-1/2" M-NST THREADS. CHROME CAPS AND CHAINS SHALL ALSO BE SUPPLIED. THE VALVES SHALL BE CONTROLLED BY A CHROME PLATED, PUSH-PULL, LOCKING T-HANDLES ON THE OPERATOR'S PANEL. THE DISCHARGES SHALL ALSO COME EQUIPPED WITH A QUARTER-TURN; 3/4" DRAIN VALVES.

ONE (1)

**2-1/2" LEFT REAR DISCHARGE**

A 2-1/2" LEFT REAR DISCHARGE SHALL BE PROVIDED USING 2-1/2" PIPE WITH A CHROME 2-1/2" FNPT X 2-1/2" MNST ADAPTER ON THE OUTSIDE END. A CHROME CAP AND CHAIN SHALL BE PROVIDED. REAR DISCHARGE SHALL BE OPERATED BY A BRONZE INLINE 2-1/2" VALVE WITH A CHROME PLATED, PUSH-PULL, LOCKING T-HANDLE MOUNTED ON THE PUMP PANEL. THE DISCHARGE SHALL COME WITH A QUARTER-TURN, 3/4" DRAIN VALVE.

ONE (1)

**2.5" CHROME PLATED 30 DEGREE ELBOW**

THERE SHALL BE ONE (1) CHROME PLATED ELBOW, KOCHEK KE30, PROVIDED. THE ELBOW SHALL HAVE A 30 DEGREE TURN AND 2.5" MNST X 2.5" FNST THREADS.

ONE (1)

**3" DECK GUN DISCHARGE**

A 3" (DECK GUN) DISCHARGE PIPE INSTALLED ABOVE PUMP COMPARTMENT. THE PIPE SHALL TERMINATE WITH A 3" FNPT X FOUR (4)-BOLT FLANGE. A 3" INLINE VALVE SHALL CONTROL THE DISCHARGE. THE VALVE SHALL BE A QUARTER TURN BALL TYPE OF FIXED PIVOT DESIGN AND CONSTRUCTED OF BRONZE. THE DISCHARGE CONTROL HANDLE SHALL BE A CHROME PUSH/PULL LOCKING "T" HANDLE TYPE LOCATED ON THE OPERATOR PANEL. THE VALVE SHALL BE OF THE SLO-CLOSE DESIGN SO AS NOT TO ALLOW THE VALVE TO OPEN OR CLOSE IN LESS THAN 3 SECONDS. THE DISCHARGE SHALL BE EQUIPPED WITH A QUARTER-TURN, 3/4" DRAIN VALVE.

ONE (1)

**4" RIGHT SIDE DISCHARGE**

A 4" DISCHARGE WITH A BRONZE VALVE SHALL BE LOCATED ON THE RIGHT SIDE PANEL. THE VALVE SHALL BE OPERATED FROM THE PANEL WITH A HAND WHEEL CONTROL. THE VALVE SHALL BE OF THE SLO-CLOSE DESIGN SO AS NOT TO ALLOW THE VALVE TO OPEN OR CLOSE IN LESS THAN 3 SECONDS. THE THREADS ON THE VALVE SHALL BE 4" MNST WITH CHROME CAP AND CHAIN. THE VALVE SHALL BE VERTICALLY MOUNTED

WITH THE VALVE BODY MOUNTED BEHIND THE PUMP PANEL, CONNECTED TO THE DISCHARGE SIDE OF THE PUMP. THE DISCHARGE SHALL COME EQUIPPED WITH A QUARTER-TURN, 3/4" DRAIN VALVE.

ONE (1)

**STORZ ELBOW**

THERE SHALL BE ONE (1) KOCHEK MODEL SKE, 4" FNST X 5" STORZ ELBOW PROVIDED WITH THE APPARATUS.

ONE (1)

**CAP - 5" WITH CHAIN**

THERE SHALL BE ONE (1) KOCHEK MODEL 5" CC507 CAP WITH CHAIN PROVIDED ON THE APPARATUS.

ONE (1)

**TANK VISION GAUGE**

THE WATER LEVEL GAUGE SHALL BE A TANK VISION MODEL WL2000-FER, WITH NINE SUPER BRIGHT LED'S TO SHOW THE TANK VOLUME. THE DISPLAY SHALL USE A TWO-DIMENSIONAL, TWO-ELEMENT LENS TO REFRACT THE LIGHT FROM THE LED'S AND TO PROVIDE FULL 180-DEGREE VISIBILITY FOR THE LEVEL INDICATIONS. THE GAUGE SHALL USE A PRESSURE TRANSDUCER INSTALLED NEAR THE BOTTOM OF THE WATER TANK TO DETERMINE THE CORRECT VOLUME IN THE TANK.

ONE (1)

**WHELEN PS TANK STRIPLIGHT**

THERE SHALL BE A PAIR OF PS TANK STATUS LIGHTS, WITH 96 LED'S STEADY BURN GREEN, BLUE, AMBER, AND RED. THE LIGHT PROVIDES BRIGHT, EASY TO IDENTIFY INDICATION OF WATER STATUS. THE UNIT IS SURFACE MOUNTED, HAS LOW CURRENT CONSUMPTION, FULLY ENCAPSULATED, AND CARRIES A FIVE (5) YEAR WARRANTY FROM WHELEN. THE LIGHTS SHALL BE MOUNTED PER CUSTOMER REQUIREMENTS, TYPICALLY ONE EACH SIDE ON OR NEAR THE CAB. THE UNIT SHALL WORK IN CONJUNCTION WITH THE MASTER ON THE PUMP PANEL.

ONE (1)

**FOAM PRO 2001 SYSTEM**

THERE SHALL BE A FULLY AUTOMATIC ELECTRONIC DIRECT INJECTION FOAM PROPORTIONING SYSTEM FURNISHED AND INSTALLED ON THE APPARATUS. THE SYSTEM SHALL BE CAPABLE OF CLASS A FOAM CONCENTRATES AND MOST CLASS B. THE PROPORTIONING OPERATION SHALL BE BASED ON AN ACCURATE DIRECT MEASUREMENT OF WATER FLOWS WITH NO WATER FLOW RESTRICTION. SYSTEM MUST BE CAPABLE OF DELIVERING ACCURACY TO WITHIN 3% OF CALIBRATED SETTINGS OVER THE ADVERTISED OPERATING RANGE. THE SYSTEM SHALL BE EQUIPPED WITH A DIGITAL ELECTRONIC CONTROL DISPLAY SUITABLE FOR INSTALLATION THE PUMP PANEL. THIS PROPORTIONING SYSTEM SHALL MEET NFPA STANDARDS FOR FOAM PROPORTIONING SYSTEMS AND THE DESIGN SHALL HAVE PASSED TESTING AGAINST SAE AUTOMOTIVE RELIABILITY STANDARDS APPROPRIATE FOR THE APPLICATION. THE FOAM SYSTEM SHALL BE INSTALLED IN ACCORDANCE WITH THE MANUFACTURER RECOMMENDATIONS. PADDLEWHEEL-TYPE FLOWMETERS SHALL BE INSTALLED IN THE DISCHARGES SPECIFIED TO BE "FOAM CAPABLE". WHEN THE USE OF MORE THAN ONE FLOWMETER IS REQUIRED, AN INTERFACE ELECTRONICS MODULE SHALL BE PROVIDED TO TOTAL THESE FLOWS AND SEND THE FLOW TOTAL TO THE MICROPROCESSOR IN THE COMPUTER CONTROL DISPLAY.

THE SYSTEM SHALL BE EQUIPPED WITH A DIGITAL ELECTRONIC CONTROL DISPLAY. IT SHALL BE INSTALLED ON THE PUMP OPERATORS PANEL AND ENABLE THE PUMP OPERATOR TO PERFORM THE FOLLOWING CONTROL AND OPERATION FUNCTIONS:

- ACTIVATE THE FOAM SYSTEM
- PROVIDE PUSH-BUTTON CONTROL OF FOAM CONCENTRATE PROPORTIONING RATE FROM .1% TO 9.9% IN .1% INCREMENTS
- SHOW CURRENT FLOW PER-MINUTE OF WATER

- SHOW TOTAL AMOUNT OF WATER DISCHARGED DURING AND AFTER FOAM, OPERATIONS ARE COMPLETED
- SHOW TOTAL AMOUNT OF FOAM CONCENTRATE CONSUMED
- PROVIDE SIMULATED FLOW FOR MANUAL OPERATION
- PERFORM SETUP AND DIAGNOSTIC FUNCTIONS FOR THE COMPUTER CONTROL MICROPROCESSOR
- FLASH A "LOW CONCENTRATE" WARNING FOR TWO MINUTES WHEN THE FOAM CONCENTRATE TANK(S) RUN LOW OF CONCENTRATE
- FLASH "NO CONCENTRATE" WARNING IF FOAM CONCENTRATE WAS NOT CHANGED OR FOAM CONCENTRATE WAS NOT ADDED TO THE LOW TANK AND SHUT DOWN FOAM CONCENTRATE PUMP

THE DISPLAY SHALL HAVE THE CAPABILITIES WHEN USING A MANUAL OR ELECTRONIC DUAL TANK SWITCHING SYSTEM OF THE FOLLOWING ADDITIONAL FUNCTIONS:

- DISPLAYS FOAM TANK SELECTION
- SEPARATE DEFAULT SETTING FOR FOAM CONCENTRATE INJECTION RATE
- TOTAL AMOUNT OF FOAM CONCENTRATE USED FROM SELECTED TANK
- DUAL FOAM CONCENTRATE FOAM PUMPS CALIBRATION

THE FOAM SYSTEM SHALL HAVE A 12-VOLT ELECTRIC MOTOR DESIGNED FOR WET AND HIGH HUMIDITY ENVIRONMENTS, DIRECTLY COUPLED TO THE (POSITIVE DISPLACEMENT) FOAM CONCENTRATE PUMP WITH A RATED CAPACITY OF UP TO 2.5 GPM AT 150 PSI WITH OPERATION PRESSURES UP TO 400 PSI. THE SYSTEM SHALL DRAW A MAXIMUM OF 40 AMPS AT 12 VDC. A PUMP MOTOR ELECTRONIC DRIVER (MOUNTED AT THE BASE OF THE PUMP) SHALL RECEIVE SIGNALS FROM THE COMPUTER CONTROL DISPLAY AND POWER THE 1/2 HP ELECTRIC MOTOR DIRECTLY COUPLED TO THE CONCENTRATE PUMP IN A VARIABLE SPEED DUTY CYCLE TO ENSURE THAT THE CORRECT PROPORTION OF CONCENTRATE PRESET BY THE PUMP OPERATOR IS INJECTED INTO THE WATER STREAM.

WHEN TWO TYPES OF FOAM CONCENTRATES ARE TO BE USED, TWO FOAM CONCENTRATE TANKS SHALL BE INSTALLED AND PIPED TO THE FOAM CONCENTRATE PUMP VIA THE ELECTRIC DUAL TANK VALVE OR THE MANUAL DUAL TANK VALVE.

FULL FLOW CHECK VALVE SHALL BE PROVIDED TO PREVENT FOAM CONTAMINATION OF FIRE PUMP AND WATER TANK OR WATER CONTAMINATION OF FOAM TANK.

COMPONENTS OF THE COMPLETE PROPORTIONING SYSTEM SHALL INCLUDE:

- OPERATOR CONTROL AND DISPLAY
- PADDLEWHEEL FLOWMETERS
- PUMP AND ELECTRIC MOTOR/MOTOR DRIVER
- WIRING HARNESSES
- LOW LEVEL TANK SWITCH
- MULTI-FLO ELECTRONIC MODULE (IF MORE THAN ONE FLOWMETER IS USED)
- FOAM TANKS
- ELECTRONIC DUAL TANK VALVE OR MANUAL DUAL TANK VALVE (IF MORE THAN ONE TANK)
- CHECK VALVE: FOAM INJECTION
- CHECK VALVE: MAIN WATERWAY

AN INSTALLATION AND OPERATION MANUAL SHALL BE PROVIDED FOR THE UNIT, ALONG WITH ONE-(1) YEAR LIMITED WARRANTY BY THE MANUFACTURER. THE SYSTEM SHALL HAVE PASSED ENVIRONMENTAL TESTING WHICH SIMULATES HEAVY USE ON OFF-ROAD MOBILE APPARATUS. TESTING SHALL HAVE BEEN CONDUCTED IN ACCORDANCE TO SAE STANDARDS.

ONE (1)

**FOAM PRO FLOWMETER 2-1/2" TEE MOUNT W/ COUPLING KIT**

THERE SHALL BE A PADDLE WHEEL STYLE FLOWMETER MOUNTED IN A 2-1/2" NPT PIPE TEE FOR MOUNTING IN A 2-1/2" DISCHARGE LINE. A GROOVE LESS VICTAULIC COUPLING SHALL BE PROVIDED FOR INSTALLATION

OF THE FLOWMETER. A WATER CHECK VALVE SHALL BE INSTALLED BEFORE THE FLOWMETER AND BETWEEN THE WATER PUMP AND THE FOAM INJECTION POINT.

ONE (1)

**TANK VISION GAUGE**

THERE SHALL BE TWO (2) TANK VISION FOAM GAUGES, MODELS WL2600-FER & WL2700-FER. THEY HAVE NINE SUPER BRIGHT LED'S TO SHOW THE TANK VOLUME. THE DISPLAY SHALL USE A TWO DIMENSIONAL, TWO-ELEMENT LENS TO REFRACT THE LIGHT FROM THE LED'S AND TO PROVIDE FULL 180-DEGREE VISIBILITY FOR THE LEVEL INDICATIONS. THE GAUGE SHALL USE A PRESSURE TRANSDUCER INSTALLED NEAR THE BOTTOM OF THE FOAM TANK TO DETERMINE THE CORRECT VOLUME IN THE TANK. ONE SHALL BE LABELED "FOAM A" AND THE OTHER SHALL BE LABELED "FOAM B". A TANK VENT IS PROVIDED WITH THE SYSTEM.

ONE (1)

**FOAM PRO MANUAL DUAL TANK SYSTEM**

A MANUAL DUAL TANK SYSTEM SHALL BE PROVIDED FOR SWITCHING FROM FOAM TANK A TO FOAM TANK B VIA A MANUAL VALVE LOCATED AT THE PUMP OPERATOR'S POSITION. THE DUAL TANK VALVE SHALL ALSO PROVIDE A CLEAN WATER FLUSH OF THE FOAM CONCENTRATE PUMP UPON FOAM TANK CHANGE OVER, TO PREVENT CONCENTRATE MIXING AND POSSIBLE JELLING. THE SYSTEM SHALL AUTOMATICALLY READ THE SELECTED FOAM CONCENTRATE TANK LOW-LEVEL SENSOR AND DISPLAY THE APPROPRIATE DEFAULT SETUP IN THE OPERATOR DISPLAY CONTROL. THE VALVE SHALL BE CAPABLE OF OPERATING PRESSURES UP TO 500 PSI.

ONE (1)

**FOAM PRO LOW TANK SWITCHES**

TWO-(2) FOAM PRO LOW LEVEL-TANK SENSOR SWITCHES SHALL BE INSTALLED ONE-(1) IN EACH FOAM TANK CONNECTED TO THE HORIZONTALLY MOUNTED DISPLAY CONTROL MODULE INDICATING WHEN A FOAM CELL HAS APPROXIMATELY FIVE (5) GALLONS OF CONCENTRATE LEFT.

ONE (1)

**FOAM PRO 2-TANK SELECTOR VALVE KIT 1/2" PORT**

THERE SHALL BE A 2-TANK SELECTOR VALVE KIT FOR THE 2000 SERIES FOAM PRO. THIS SELECTOR KIT HAS 1/2" PORTS. THIS KIT SHALL INCLUDE TWO (2), THREE-WAY PILOT OPERATED SOLENOID VALVES FOR EACH FOAM TANK, ONE (1) TWO-WAY PILOT OPERATED SOLENOID VALVE FOR THE WATER FLUSH LINE.

ONE (1)

**FOAM PRO PLACARD**

THERE SHALL BE A PLACARD INSTALLED ON THE PUMP PANEL, A SCHEMATIC OF THE FOAM PRO SYSTEM WHICH HAS BEEN INSTALLED.

ONE (1)

**FOAM PROPORTIONING SYSTEMS - NFPA TEST**

NFPA 1901 PERFORMANCE REQUIREMENTS

THE PROPORTIONING SYSTEM SHALL BE CAPABLE OF PROPORTIONING FOAM CONCENTRATE IN ACCORDANCE WITH THE FOAM CONCENTRATE MANUFACTURER'S RECOMMENDATION FOR THE TYPE OF FOAM CONCENTRATE USED IN THE SYSTEM OVER THE SYSTEM'S DESIGN RANGE OF FLOW AND PRESSURE. THE FOAM PROPORTIONING SYSTEMS WATER FLOW CHARACTERISTICS AND THE RANGE OF PROPORTIONING RATIOS SHALL BE SPECIFIED.

THE FOAM SYSTEM SHALL COMPLY WITH NFPA 1901 CHAPTER 17.0 AS IT RELATES TO THE SPECIFIED SYSTEM.

FOAM TANK PIPING

THE FOAM SUPPLY LINE SHALL BE NON-COLLAPSIBLE. THERE SHALL BE A MEANS PROVIDED TO PREVENT WATER BACKFLOW IN TO THE FOAM PROPORTIONING SYSTEM AND STORAGE TANK(S).

EITHER A FILTER OR STRAINER PROVIDED ON THE FOAM CONCENTRATE SUPPLY SIDE OF THE FOAM PROPORTIONING TO PREVENT ANY DEBRIS THAT MAY AFFECT THE OPERATION OF THE FOAM PROPORTIONING SYSTEM FROM ENTERING THE SYSTEM. THE STRAINER ASSEMBLY SHALL CONSIST OF A REMOVABLE STRAINING ELEMENT, HOUSING, AND RETAINER. THE STRAINER ASSEMBLY SHALL ALLOW FULL FLOW CAPACITY OF THE FOAM SUPPLY LINE.

FLUSHING

FOAM CONCENTRATE SYSTEM FLUSH LINE(S) SHALL BE PROVIDED AS REQUIRED BY THE FOAM SYSTEM MANUFACTURER. THE DESIGN SHALL INCORPORATE A MEANS TO PREVENT WATER BACKFLOW INTO THE CONCENTRATE TANK OR WATER TANK DURING THE FLUSHING OPERATION. WHERE THE FOAM PROPORTIONING SYSTEM IS CONNECTED TO MORE THAN ONE (1) FOAM STORAGE TANK, PROVISIONS SHALL BE MADE TO FLUSH ALL COMMON LINES TO AVOID CONTAMINATION OF DISSIMILAR FOAM CONCENTRATES.

CONTROLS FOR FOAM SYSTEM

THE FOAM PROPORTIONING SYSTEM OPERATION CONTROLS SHALL BE LOCATED AT OR NEAR THE PUMP OPERATOR'S POSITION AND SHALL BE CLEARLY LABELED.

ALL FOAM-PROPORTIONING SYSTEMS THAT REQUIRE FLUSHING SHALL PROVIDE CONTROLS, WHICH ENABLE THE OPERATOR TO FLUSH THE SYSTEM IN ACCORDANCE WITH THE FOAM MANUFACTURER'S INSTRUCTIONS.

FOAM PROPORTIONING SYSTEMS THAT INCORPORATE FOAM CONCENTRATE METERING VALVES SHALL HAVE EACH METERING VALVE CALIBRATED TO INDICATE THE RATE(S) OF FLOW OF THE FOAM CONCENTRATE PROPORTIONING AVAILABLE AS DETERMINED BY THE DESIGN OF THE SYSTEM.

FOAM PROPORTIONING SYSTEMS THAT INCORPORATE AUTOMATIC PROPORTIONING FEATURES SHALL BE EQUIPPED WITH CONTROLS, WHICH ENABLE THE OPERATOR TO ISOLATE THE AUTOMATIC FEATURE AND OPERATE THE SYSTEM IN A MANUAL MODE.

NAMEPLATE, LABELS, INSTRUCTION SPECIFICATIONS

THERE SHALL BE A NAMEPLATE PROVIDED THAT IS CLEARLY MARKED WITH THE IDENTIFICATION AND FUNCTION OF EACH CONTROL GAUGE AND INDICATOR RELATED TO THE FOAM PROPORTIONING SYSTEM.

THERE SHALL BE A LABEL PROVIDED ON THE OPERATOR'S PANEL THAT IDENTIFIES THE TYPE(S) OF FOAM CONCENTRATE(S) THE SYSTEM IS DESIGNED TO USE. THIS LABEL SHALL STATE THE MINIMUM/MAXIMUM FOAM-PROPORTIONING RATE AT THE MINIMUM/MAXIMUM FOAM PROPORTIONING RATED SYSTEM FLOW AND PRESSURE.

FOAM PROPORTIONING SYSTEM INSTRUCTION PLATE SHALL BE PROVIDED. THIS INCLUDES A MINIMUM PIPING SCHEMATIC OF THE SYSTEM AND BASIC OPERATING INSTRUCTIONS.

TWO (2) COPIES OF AN OPERATIONS AND MAINTENANCE MANUAL SHALL BE PROVIDED. THESE MANUALS SHALL INCLUDE A COMPLETE DIAGRAM OF THE SYSTEM, ALONG WITH OPERATING INSTRUCTIONS AND DETAILS OUTLINING ALL RECOMMENDED MAINTENANCE PROCEDURES.

FOAM PROPORTIONING SYSTEM TESTING

THE APPARATUS MANUFACTURER SHALL TEST THE ACCURACY OF THE FOAM PROPORTIONING SYSTEM PRIOR TO DELIVERY OF THE APPARATUS.

IF THE MANUFACTURER'S RATED PROPORTIONING RATIO IS BELOW 3%, THE FOAM SYSTEM SHALL PROPORTION FOAM CONCENTRATE WITHIN 0% /+40% OF THE MANUFACTURER'S RATED PROPORTIONING RATIO ACROSS THE MANUFACTURER STATED RANGE OF WATER FLOW AND PRESSURE.

IF THE MANUFACTURER'S RATED PROPORTIONING RATIO IS ABOVE 3%, THE FOAM SYSTEM SHALL PROPORTION FOAM CONCENTRATE WITHIN 0% /+40% OF THE MANUFACTURER'S RATED PROPORTIONING RATIO OR 1 PERCENTAGE POINT, WHICHEVER IS LESS ACROSS THE MANUFACTURER'S STATED RANGE OF WATER FLOW AND PRESSURE.

ONE (1)

**FOAM TANKS (2)**

THERE WILL BE TWO (2) TWENTY (20) GALLON FOAM TANKS DESIGNED AS AN INTEGRAL PART OF THE WATER TANK. THE FOAM CELLS WILL HAVE A SEPARATE FILL TOWER AND INCLUDE A PRESSURE/ VACUUM VENT (PVV). THE TANK WILL BE CONFIGURED WITH APPROPRIATE INLETS AND OUTLETS FOR THE SPECIFIED FOAM APPLICATION.

ONE (1)

**BOOSTER TANK - POLYPROPYLENE**

THE BOOSTER TANK SHALL HAVE A CAPACITY OF 750 U.S. GALLONS COMPLETE WITH A LIFETIME WARRANTY. THE TANK MANUFACTURER SHALL MARK THE TANK AND FURNISH NOTICE THAT INDICATES PROOF OF WARRANTY. THE PURPOSE OF THE MARKINGS AND NOTICE IS TO INFORM DEPARTMENT PERSONNEL WHO STORE, STOCK, OR USE THE TANK THAT THE UNIT IS UNDER WARRANTY. THE MARKINGS INDICATE THE SUBSTANCE AND DURATION OF THE WARRANTY. IT ALSO INCLUDES WHOM TO NOTIFY IF THE TANK IS FOUND TO BE DEFECTIVE.

**CONSTRUCTION**

THE TANK SHALL BE "T" SHAPED AND CONSTRUCTED OF 1/2" THICK POLYPROPYLENE SHEET STOCK. THIS MATERIAL SHALL BE A NON-CORROSIVE STRESS RELIEVED THERMOPLASTIC, NATURAL IN COLOR AND UV STABILIZED FOR MAXIMUM PROTECTION.

THE BOOSTER TANK SHALL BE OF A SPECIFIED CONFIGURATION AND IS DESIGNED TO BE COMPLETELY INDEPENDENT OF THE BODY AND COMPARTMENTS. ALL JOINTS AND SEAMS ARE NITROGEN WELDED AND TESTED FOR MAXIMUM STRENGTH. THE TOP OF THE TANK IS FITTED WITH REMOVABLE LIFTING EYES DESIGNED WITH A 3 TO 1 SAFETY FACTOR TO FACILITATE EASY REMOVABLE. THE TRANSVERSE SWASH PARTITIONS SHALL BE MANUFACTURED OF 3/8" POLYPROPYLENE AND EXTEND FROM APPROXIMATELY 4" OFF THE FLOOR TO JUST UNDER THE COVER. THE LONGITUDINAL SWASH PARTITIONS SHALL BE CONSTRUCTED OF 3/8" POLYPROPYLENE AND EXTEND FROM THE FLOOR OF THE TANK THROUGH THE COVER TO ALLOW FOR POSITIVE WELDING AND MAXIMUM INTEGRITY. ALL PARTITIONS SHALL BE EQUIPPED WITH VENT AND AIR HOLES TO PERMIT MOVEMENT OF AIR AND WATER BETWEEN COMPARTMENTS. THE PARTITIONS SHALL BE DESIGNED TO PROVIDE MAXIMUM WATER FLOW. ALL SWASH PARTITIONS INTERLOCK WITH ONE ANOTHER AND ARE WELDED TO EACH OTHER AS WELL AS TO THE WALLS OF THE TANK.

**FILL TOWER AND COVER**

THE TANK SHALL HAVE A COMBINATION VENT AND MANUAL FILL TOWER. THE FILL TOWER SHALL BE CONSTRUCTED OF 1/2" POLYPROPYLENE AND SHALL BE A MINIMUM DIMENSION OF 12" X 12" OUTER PERIMETER. THE TOWER SHALL BE LOCATED IN THE LEFT FRONT CORNER OF THE TANK UNLESS OTHERWISE SPECIFIED BY THE PURCHASER. THE TOWER SHALL HAVE A 1/4" THICK REMOVABLE POLYPROPYLENE SCREEN AND A POLYPROPYLENE HINGED-TYPE COVER. INSIDE THE FILL TOWER, APPROXIMATELY 4" DOWN FROM THE TOP SHALL BE FASTENED A COMBINATION VENT / OVERFLOW PIPE. THE VENT OVERFLOW SHALL BE A MINIMUM OF SCHEDULE 40 POLYPROPYLENE PIPE WITH A MINIMUM ID OF 4" THAT IS DESIGNED TO RUN THROUGH THE TANK, AND SHALL BE PIPED BEHIND THE REAR WHEELS TO MAXIMIZE TRACTION.

THE TANK COVER SHALL BE CONSTRUCTED OF 1/2" THICK POLYPROPYLENE, AND UV STABILIZED, TO INCORPORATE A MULTI THREE-PIECE LOCKING DESIGN, WHICH ALLOWS FOR INDIVIDUAL REMOVAL AND INSPECTION IF NECESSARY. THE TANK COVER SHALL BE RECESSED 3/8" FROM THE TOP OF THE TANK AND SHALL BE WELDED TO BOTH SIDES AND LONGITUDINAL PARTITIONS FOR MAXIMUM RIGIDITY. EACH ONE OF THE COVERS SHALL HAVE HOLD DOWNS CONSISTING OF 2" POLYPROPYLENE DOWELS SPACED A MAXIMUM OF 30" APART. THESE DOWELS SHALL EXTEND THROUGH THE COVERS AND SHALL ASSIST IN KEEPING THE COVERS RIGID UNDER FAST FILLING CONDITIONS. A MINIMUM OF TWO (2) LIFTING DOWELS SHALL BE DRILLED AND TAPPED 1/2" X 13" TO ACCOMMODATE THE LIFTING EYES.

**SUMP**

THERE SHALL BE ONE (1) SUMP STANDARD PER TANK. THE SUMP SHALL BE CONSTRUCTED OF 1/2" POLYPROPYLENE AND BE LOCATED IN THE LEFT FRONT QUARTER OF THE TANK, UNLESS SPECIFIED OTHERWISE. ON ALL TANKS THAT REQUIRE A FRONT SUCTION, A 3" SCHEDULE 40 POLYPROPYLENE PIPE SHALL BE INSTALLED THAT SHALL INCORPORATE A DIP TUBE FROM THE FRONT OF THE TANK TO THE SUMP LOCATION. THE SUMP SHALL HAVE A MINIMUM 3" NPT THREADED OUTLET ON THE BOTTOM FOR A DRAIN PLUG. THIS SHALL BE USED AS A COMBINATION CLEAN-OUT AND DRAIN. ALL TANKS SHALL HAVE AN ANTI-SWIRL PLATE LOCATED APPROXIMATELY 2" ABOVE THE SUMP.

**OUTLETS**

THERE SHALL BE TWO (2) STANDARD TANK OUTLETS: ONE FOR THE TANK-TO-PUMP SUCTION LINE, WHICH SHALL BE A MINIMUM OF 3" NPT COUPLING; AND, ONE FOR A TANK FILL LINE, WHICH SHALL BE A MINIMUM OF 1" NPT COUPLING. ALL TANK FILL COUPLINGS SHALL BE BACKED WITH FLOW DEFLECTORS TO BREAK UP THE STREAM OF WATER ENTERING THE TANK, AND BE CAPABLE OF WITHSTANDING SUSTAINED FILL RATES OF UP TO 1,000 GPM. THE ADDITION OF REAR SUCTION FITTINGS, NURSE VALVE FITTINGS, DUMP VALVE FITTINGS, AND THROUGH TANK SLEEVES TO ACCOMMODATE REAR DISCHARGE PIPING MUST BE SPECIFIED. ALL AUXILIARY OUTLETS AND INLETS MUST MEET ALL NFPA 1900 GUIDELINES IN EFFECT AT THE TIME OF MANUFACTURE.

**MOUNTING**

THE TANK SHALL REST ON THE BODY CROSS MEMBERS IN CONJUNCTION WITH SUCH ADDITIONAL CROSS MEMBERS, SPACED AT A DISTANCE THAT WOULD NOT ALLOW FOR MORE THAN 530 SQUARE INCHES OF UNSUPPORTED AREA UNDER THE TANK FLOOR. IN CASES WHERE OVERALL HEIGHT OF THE TANK EXCEEDS 40 INCHES, CROSS MEMBER SPACING MUST BE DECREASED TO ALLOW FOR NOT MORE THAN 400 SQUARE INCHES OF UNSUPPORTED AREA. THE TANK MUST BE ISOLATED FROM THE CROSS MEMBERS THROUGH THE USE OF HARD RUBBER STRIPS WITH, A MINIMUM THICKNESS AND WIDTH DIMENSION OF .250" X 2" AND A MINIMUM ROCKWELL HARDNESS OF 60 DUROMETER. THE TANK SHALL BE CAPTURED FRONT AND REAR AS WELL AS SIDE-TO-SIDE TO PREVENT THE TANK FROM SHIFTING DURING VEHICLE OPERATION. THE TANK SHALL SIT CRADLE MOUNTED USING FOUR (4) CORNER ANGLES OF 4" X 4" X .250" THICKNESS X 6" HIGH WELDED DIRECTLY TO THE BODY CROSS MEMBERS. THE ENTIRE PERIMETER OF THE BOTTOM OF THE TANK SHALL BE SUPPORTED. ALTHOUGH THE TANK IS DESIGNED ON THE FREE-FLOATING SUSPENSION PRINCIPLE, IT SHALL BE REQUIRED THAT THE TANK HAVE HOLD DOWN RESTRAINTS TO MINIMIZE MOVEMENT DURING VEHICLE OPERATION. THESE RESTRAINTS SHALL BE MOUNTED TO THE SIDE WALLS OF THE HOSE BED AND EXTEND DOWN SO THAT THEY REST APPROXIMATELY 1/2" ABOVE THE TOP OF THE TANK. THE FOOT OF THE RESTRAINT DOES NOT DIRECTLY CONTACT THE TOP OF THE TANK. HOSEBED FLOORS SHALL BE DESIGNED SO THAT THE FLOOR SLAT SUPPORTS EXTEND THE FULL WIDTH OF THE HOSE BODY. THE FLOOR IS NOT PERMITTED TO DROP OFF THE EDGE OF THE TANK OR IN ANY WAY COME IN CONTACT WITH THE INDIVIDUAL COVERS WHERE PUNCTURES MAY OCCUR. THE FLOORING SHALL BE CAPABLE OF SUPPORTING UP TO 200 LBS PER SQUARE FOOT AND SHALL BE EVENLY DISTRIBUTED WHENEVER POSSIBLE. THE TANK SHALL BE COMPLETELY REMOVABLE WITHOUT DISTURBING OR DISMANTLING THE APPARATUS STRUCTURE.

ONE (1)

**WATER TANK SIZE-NFPA CERTIFICATION**

THE MANUFACTURER SHALL CERTIFY THE CAPACITY OF THE WATER TANK PRIOR TO THE DELIVERY OF THE APPARATUS. THIS CAPACITY SHALL BE RECORDED ON THE MANUFACTURER'S RECORD OF CONSTRUCTION AND THE CERTIFICATION SHALL BE PROVIDED WHEN THE APPARATUS IS DELIVERED.

ONE (1)

**POLY TANK WARRANTY-LIFETIME**

THE POLY TANK MANUFACTURER WARRANTS EACH TANK TO BE FREE FROM MANUFACTURING DEFECTS IN MATERIAL AND WORKMANSHIP FOR THE SERVICE LIFE OF THE ORIGINAL VEHICLE (VEHICLE MUST BE ACTIVELY USED IN FIRE SUPPRESSION). THE WARRANT IS TRANSFERABLE, WITH WRITTEN APPROVAL OF THE MANUFACTURER. EACH TANK IS INSPECTED AND TESTED FOR LEAKS PRIOR TO LEAVING THE MANUFACTURING FACILITY. THE TANK SHALL BE INSTALLED IN THE VEHICLE IN ACCORDANCE TO THE MANUFACTURE'S GUIDELINES.

THERE ARE NO WARRANTIES, EXPRESSED OR IMPLIED, WHICH EXTEND BEYOND THE DESCRIPTION OF THE FACE HEREOF. THERE IS NO EXPRESSED OR IMPLIED WARRANTY OF MERCHANTABILITY OR A WARRANTY OF FITNESS FOR A PARTICULAR PURPOSE. ADDITIONAL, THIS WARRANTY IS IN LIEU OF ALL OTHER OBLIGATIONS OR LIABILITIES ON THE PART OF THE MANUFACTURER.

ONE (1)

**VERTICAL LOAD TEST- BODY**

THE FIRE BODY SHALL EXCEED A VERTICAL LOAD TESTING. THE VERTICAL LOAD TEST TO THE FIRE BODY SHALL FOLLOW THE SAME STRICT AND DETAILED REQUIREMENTS OF THE ECONOMIC COMMISSION FOR EUROPE STRUCTURAL STANDARD, ECE-29R AS APPLIED TO THE CAB.

THE FIRE BODY SHALL BE PLACED UNDER A VERTICAL LOAD TEST TO SHOW STRUCTURAL INTEGRITY. THERE SHALL BE 65,979 LBS (29.53 METRIC TONS) APPLIED TO THE FIRE BODY. THERE SHALL BE NO STRUCTURE FAILURES TO THE BODY AND BODY COMPARTMENTS.

A COMPLETE PHOTOGRAPHIC, VIDEO, DATA, AND DIMENSIONAL RECORD OF THESE TESTS SHALL BE AVAILABLE AND PLACED ON RECORD FOR CUSTOMER EVALUATIONS.

ONE (1)

**ROLL UP DOOR**

ALL ROLL-UP DOORS SUPPLIED ON THE APPARATUS SHALL HAVE A SATIN FINISH.

ONE (1)

**ALUMINUM RUBRAIL**

THERE SHALL BE AN ALUMINUM RUBRAIL INSTALLED ON BOTH SIDES OF THE LOWER BODY COMPARTMENTS. THE RUBRAIL SHALL BE CONSTRUCTED FROM "C" CHANNEL EXTRUSION. THE ALUMINUM RUBRAIL SHALL BE BOLTED IN PLACE WITH STAINLESS STEEL BOLTS, AND SPACED FROM THE FIRE BODY TO PROVIDE BODY PROTECTION. THE SOLID RUBRAIL SHALL SERVE AS PROTECTION TO THE SIDE DOORS WHEN ENCOUNTERING CLOSE OBJECTS. TREADPLATE RUBRAILS OR WELDED ON SHALL NOT BE ACCEPTABLE.

ONE (1)

**ALUMINUM TREADPLATE RUNNING BOARDS**

THE RUNNING BOARDS SHALL BE CONSTRUCTED OF FIRE APPARATUS QUALITY 3/16" (.1875") ALUMINUM TREADPLATE. EACH RUNNING BOARD SHALL BE FLANGED DOWN 2.50" AND IN 1.00" TO MAXIMIZE STRENGTH AND RIGIDITY. THE RUNNING BOARDS SHALL BE BOLTED ON FOR REMOVAL OR REPLACEMENT. THE RUNNING BOARDS SHALL BE CONSTRUCTED FROM THE EMBOSSED ALUMINUM TREADPLATE.

ONE (1)

**ALUMINUM TREADPLATE REAR STEP**

THE REAR STEP SHALL BE CONSTRUCTED OF 3/16" (.1875") ALUMINUM TREADPLATE. THE REAR STEP SHALL BE FLANGED DOWN 2.50" AND IN 1.00" TO MAXIMIZE STRENGTH AND RIGIDITY. THE REAR STEP SHALL BE BOLTED ON FOR REMOVAL OR REPLACEMENT.

ALL RUNNING BOARD AND STEP SURFACES SHALL COMPLY WITH NFPA 1901.

ONE (1)

**102" WIDE APPARATUS BODY**

THE APPARATUS BODY AND SUBFRAME WILL BE CONSTRUCTED ENTIRELY OF MARINE GRADE ALUMINUM PLATE AND EXTRUSIONS.

**SUBFRAME**

THE MAIN BODY SUPPORT CROSSMEMBER EXTRUSIONS WILL BE 3" X 4" 6061T6 ALUMINUM ALLOY, DOUBLE "I" BEAM WITH A WALL THICKNESS OF 7/16" (.438"). THESE CROSSMEMBERS WILL EXTEND THE FULL WIDTH OF THE BODY TO SUPPORT THE COMPARTMENT FRAMING. THE CROSSMEMBERS WILL BE WELDED TO A 3/4" (.750") X 3" SOLID ALUMINUM, 6061T6 ALUMINUM (ALLOY FRAME RAIL) EXTRUSION. THE FRAME RAIL EXTRUSION WILL BE SHAPED IN CONTOUR WITH THE CHASSIS FRAME RAILS. THE FRAME RAIL EXTRUSION WILL BE MOUNTED OVER A 1/2" (.5") THICKNESS, REINFORCED RUBBER CUSHION TO ISOLATE THE ALUMINUM SUBFRAME FROM THE CHASSIS STEEL FRAME RAILS. THE APPARATUS BODY STRUCTURE WILL BE SECURELY FASTENED TO THE CHASSIS FRAME RAILS WITH A MINIMUM OF SIX (6) 5/8" (.625") CROSSMEMBER OD, STEEL U-BOLTS. THE MAIN BODY SUPPORT CROSSMEMBER WILL HAVE A GUSSET ABOVE AND BELOW EACH CROSSMEMBER. THE GUSSETS WILL BE CONSTRUCTED OF 2.0" X 4.0" 6063T6 ALUMINUM ALLOY EXTRUSION WITH A .190" WALL THICKNESS. THE GUSSETS WILL BE CONTINUOUSLY WELDED WITH 5356 ALUMINUM ALLOY WELDING WIRE TO ADD SUPPORT TO THE BODY SIDEWALLS. THE MAIN BODY SUPPORTS AND THE LONGITUDINAL DOUBLE "I" BEAM SUPPORTS WILL HAVE A "C" SHAPED RUBBER TANK CUSHION INSTALLED ON THE TOP OF EACH MEMBER. THIS RUBBER EXTRUSION WILL CONFORM TO THE SHAPE OF THE DOUBLE "I" BEAM EXTRUSION TO KEEP THE TANK CUSHION IN PLACE. THIS METHOD IS USED TO PREVENT DAMAGE TO THE TANK.

ABSOLUTELY NO POP-RIVETS, SCREWS OR ANY OTHER HARDWARE WILL BE USED TO HOLD THE RUBBER TANK CUSHION IN PLACE.

**BODY CONSTRUCTION**

THE COMPLETE APPARATUS BODY STRUCTURE WILL BE AN ALL WELDED CONSTRUCTION AND BE FREE FROM NUTS, BOLTS AND OTHER FASTENERS. UPON COMPLETION OF THE WELDMENTS, THE BODY WILL BE COMPLETELY SANDED AND DEBURRED FOR REMOVAL OF ALL SHARP EDGES.

THE BODY FRAMEWORK WILL BE FORMED FROM BEVELED ALUMINUM ALLOY EXTRUSIONS AND ELECTRICALLY SEAM WELDED AT EACH JOINT USING 5356 ALUMINUM ALLOY WELDING WIRE. BODY SIDES WILL BE FORMED FROM 5052 H-32 (MARINE GRADE) SMOOTH ALUMINUM PLATES. THE HORIZONTAL SURFACES ABOVE THE COMPARTMENT TOPS WILL BE CONSTRUCTED FROM ALUMINUM TREADPLATE.

THE HORIZONTAL AND VERTICAL FRAME MEMBER EXTRUSIONS WILL BE 2.0" X 4.0" WITH A .190" WALL THICKNESS. THE EXTRUSION WILL BE MADE FROM 6063T6 ALUMINUM ALLOY. THIS EXTRUSION WILL HAVE .190" OUTSIDE RADIUS CORNERS. THE LONGITUDINAL FRAME MEMBER, BELOW THE LOWER COMPARTMENTS WILL BE A 2.0" X 4.0" 6063T6 ALUMINUM ALLOY EXTRUSION WITH .190" RADIUS CORNERS. EACH BODY CORNER WILL BE A 3.5" X 9.75" 6063T6 EXTRUDED ALUMINUM SECTION WITH .210" WALL THICKNESS, AND WILL BE WELDED AS AN INTEGRAL PART OF THE BODY. THIS EXTRUSION WILL HAVE A 1" CORNER RADIUS.

THE WHEEL WELL WILL BE CONSTRUCTED FROM 2" X 4" X .190" WALL THICKNESS. THE EXTRUSION WILL BE MADE FROM 6063T6 ALUMINUM ALLOY AND HAVE .190" OUTSIDE RADIUS CORNERS. THE EXTRUSION WILL BE SLOTTED THE FULL LENGTH TO PERMIT AN INTERNAL FIT OF 1/8" (.125") ALUMINUM TREADPLATE PANELS. THE WHEEL WELL LINERS WILL BE CONSTRUCTED OF 3003 H-14 SMOOTH ALUMINUM PLATES. THEY WILL BE BOLTED IN PLACE FOR EASE OF MAINTENANCE. THE WHEEL WELL FENDERETTES WILL BE CONSTRUCTED OF #304 STAINLESS STEEL WITH A #7 POLISHED FINISH.

A DEFLECTION SHIELD WILL BE MOUNTED TO THE BODY SUBFRAME TO KEEP ROAD DEBRIS FROM ENTERING THE WATER TANK AREA.

THE HOSEBED SIDES WILL BE CONSTRUCTED OF 3/16" (.1875") 5052 H-32 (MARINE GRADE) SMOOTH ALUMINUM PLATE WELDED TO THE EXTRUDED FRAMEWORK. THERE WILL BE A 3" X 3.5" 6063T6 ALUMINUM EXTRUSION WITH .190" WALL THICKNESS RUNNING THE ENTIRE LENGTH OF THE HOSEBED AT THE TOP FOR STRUCTURAL RIGIDITY. THE HOSEBED DECKING WILL BE CONSTRUCTED FROM ANODIZED ALUMINUM EXTRUSIONS. THE EXTRUSIONS WILL BE 3/4" (.750") X 8.125" AND HAVE 3/4" (.750") X 3.00" HAT CHANNEL ATTACHED TO THE UNDERSIDE TO FORM A ONE-PIECE GRID. THE ENTIRE DECK WILL BE REMOVABLE, IN ONE PIECE, TO ALLOW EASE OF SERVICEABILITY TO THE TANK. THE HOSEBED WILL INCLUDE AN EXTRUSION ACROSS THE FRONT AND REAR OF THE COMPARTMENT FOR THE INSTALLATION OF ADJUSTABLE HOSEBED DIVIDERS.

THERE WILL BE SLANTED BEAVERTAILS PROVIDED AT THE REAR OF THE BODY. THE BEAVERTAILS WILL BE CONSTRUCTED OF 2" X 2" X .190" THICKNESS, 6063T6 ALUMINUM ALLOY EXTRUSIONS WITH .190" RADIUS CORNERS. THERE WILL BE A REMOVABLE PANEL ON EITHER SIDE OF THE EXTRUSION THAT IS CONSTRUCTED OF 1/8" (.125") ALUMINUM TREADPLATE.

**COMPARTMENT CONSTRUCTION**

THE COMPARTMENT SIDEWALLS WILL BE OF ONE-PIECE CONSTRUCTION. THE WALLS WILL BE FORMED FROM 3/16"(.1875") 5052 H-32 (MARINE GRADE) SMOOTH ALUMINUM PLATE. ALL COMPARTMENT FLOORS WILL BE FORMED FROM 3/16"(.1875") ALUMINUM TREADPLATE. THE FLOORS WILL BE WELDED IN PLACE WITH A CONTINUOUS WELD ALL AROUND THE PERIMETER TO INSURE MAXIMUM STRENGTH.

THE EXTERNAL COMPARTMENT TOPS WILL BE CONSTRUCTED OF 1/8" (.125") ALUMINUM TREADPLATE. THE TOPS WILL HAVE A FORMED EDGE, WHICH SERVES AS A DRIP RAIL FOR THE COMPARTMENTS BELOW. THE COMPARTMENT TOPS WILL BE SECURED WITH STAINLESS STEEL SCREWS TO ALLOW FOR EASE OF REMOVAL FOR ACCESS TO THE BODIES WIRING HARNESSES.

THE COMPARTMENT SEAMS WILL BE SEALED WITH PERMANENT PLIABLE SILICONE CAULKING.

EACH COMPARTMENT WILL BE VENTED THROUGH A 3"W X 15"H LOUVER THAT IS MACHINED STAMPED IN A PANEL LOCATED IN EACH BODY CORNER EXTRUSION. THE PANEL WILL BE REMOVABLE TO PROVIDE ACCESS TO SERVICE WIRING AND OTHER MOUNTED COMPONENTS.

**COMPARTMENTATION**

**LEFT SIDE**

L1
THERE WILL BE ONE (1) LEFT FRONT COMPARTMENT INSTALLED AHEAD OF THE REAR AXLE. THIS COMPARTMENT WILL HAVE ONE (1) ROLL-UP DOOR. THE INTERIOR COMPARTMENT DIMENSIONS WILL BE APPROXIMATELY 44"W X 72"H X 28"D IN THE LOWER COMPARTMENT AND 15"D IN THE UPPER COMPARTMENT. THE COMPARTMENT WILL HAVE A USEABLE DOOR OPENING OF APPROXIMATELY 41"W X 59"H

L2
THERE WILL BE ONE (1) COMPARTMENT INSTALLED ABOVE THE WHEEL WELL. THIS COMPARTMENT WILL HAVE ONE (1) ROLL-UP DOOR. THE INTERIOR COMPARTMENT DIMENSIONS WILL BE APPROXIMATELY 58"W X 40"H X 15"D. THE COMPARTMENT WILL HAVE A USEABLE DOOR OPENING OF APPROXIMATELY 55"W X 27"H.

L3
THERE WILL BE ONE (1) LEFT REAR COMPARTMENT INSTALLED BEHIND THE REAR AXLE. THIS COMPARTMENT WILL HAVE ONE (1) ROLL-UP DOOR. THE INTERIOR DIMENSIONS WILL BE APPROXIMATELY 49"W X 72"H X TRANSVERSE IN THE LOWER COMPARTMENT AND 15"D IN THE UPPER COMPARTMENT. THE COMPARTMENT WILL HAVE A USEABLE DOOR OPENING OF APPROXIMATELY 46"W X 59"H.

**RIGHT SIDE**

R1
THERE WILL BE ONE (1) RIGHT FRONT COMPARTMENT INSTALLED AHEAD OF THE REAR AXLE. THIS COMPARTMENT WILL HAVE ONE (1) ROLL-UP DOOR. THE INTERIOR COMPARTMENT DIMENSIONS WILL BE APPROXIMATELY 44"W X 72"H X 28"D IN THE LOWER COMPARTMENT AND 15"D IN THE UPPER COMPARTMENT. THE COMPARTMENT WILL HAVE A USEABLE DOOR OPENING OF APPROXIMATELY 41"W X 59"H

R2
THERE WILL BE ONE (1) COMPARTMENT INSTALLED ABOVE THE WHEEL WELL. THIS COMPARTMENT WILL HAVE ONE (1) ROLL-UP DOOR. THE INTERIOR COMPARTMENT DIMENSIONS WILL BE APPROXIMATELY 58"W X 40"H X 15"D. THE COMPARTMENT WILL HAVE A USEABLE DOOR OPENING OF APPROXIMATELY 55"W X 27"H.

R3
THERE WILL BE ONE (1) RIGHT REAR COMPARTMENT INSTALLED BEHIND THE REAR AXLE. THIS COMPARTMENT WILL HAVE ONE (1) ROLL-UP DOOR. THE INTERIOR DIMENSIONS WILL BE APPROXIMATELY 49"W X 72"H X TRANSVERSE IN THE LOWER COMPARTMENT AND 15"D IN THE UPPER COMPARTMENT. THE COMPARTMENT WILL HAVE A USEABLE DOOR OPENING OF APPROXIMATELY 46"W X 59"H.

**CENTER REAR**

B1
THERE WILL BE ONE (1) COMPARTMENT INSTALLED AT THE CENTER REAR OF THE APPARATUS. THIS COMPARTMENT WILL HAVE A ROLL UP DOOR. THE COMPARTMENT WILL HAVE A USEABLE DOOR OPENING OF APPROXIMATELY 43"W X FULL HEIGHT.

**COMPARTMENT DOORS**

ROBINSON ROLL-UP DOORS WILL BE INSTALLED ON ALL COMPARTMENTS OF THIS APPARATUS.

SLATS ARE TO DOUBLE-WALL (BOX FRAME) ALUMINUM EXTRUSION. EXTERIOR SURFACES ARE TO BE FLAT. INTERIOR SURFACES ARE TO BE CONCAVE TO PREVENT LOOSE EQUIPMENT FROM JAMMING DOORS. THE SLATS MUST BE ANODIZED TO ELIMINATE OXIDATION. THE SLATS ARE TO HAVE INNER-LOCKING END SHOES ON EVERY SLAT SECURED BY A PUNCH-DIMPLE PROCESS. THE SLATS ARE TO HAVE INTERLOCKING JOINTS WITH A FOLDING LOCKING FLANGE. BETWEEN EACH SLAT WILL BE A PVC/VINYL INNER SEAL TO PREVENT ANY METAL-TO-METAL CONTACT.

THE TRACK WILL BE ONE-PIECE ALUMINUM, WHICH HAS AN ATTACHING FLANGE AND FINISHING FLANGE INCORPORATED INTO ITS DESIGN, WHICH PROVIDES A FINISH LOOK TO INSTALLATION WITHOUT ADDITIONAL TRIM OR CAULKING. THE TRACK IS TO HAVE A REPLACEABLE SIDE SEAL. THE SIDE SEAL WILL PREVENT WATER AND DUST INTRUSION INTO THE COMPARTMENT.

THERE WILL BE AN ALUMINUM DRIP RAIL ABOVE EACH COMPARTMENT DOOR WITH A BUILT IN REPLACEABLE WIPER SEAL.

EACH ROLL UP DOOR WILL HAVE A COUNTER BALANCE TO ASSIST IN LIFTING AND ELIMINATE THE RISK OF ACCIDENTAL CLOSING.

A FULL WIDTH LIFT BAR, OPERABLE BY ONE HAND, WILL BE USED AS A POSITIVE LATCH DEVICE FOR SECURING EACH INDIVIDUAL COMPARTMENT DOOR IN THE CLOSED POSITION.

THE OUTSIDE DOOR WILL HAVE A NATURAL FINISH.

THERE WILL BE AN ANODIZED ALUMINUM SILL PLATE INSTALLED OVER THE COMPARTMENT DOOR.

**GROUND LADDER/PIKE POLE STORAGE**

THE APPARATUS WILL BE EQUIPPED WITH A REAR, LADDER ACCESS, STORAGE COMPARTMENT CONFIGURED THROUGH THE CENTER OF THE WATER TANK. THIS STORAGE AREA WILL BE COMPLETELY ENCLOSED AND DESIGNED TO PROTECT THE CONTENTS OF THE LADDER COMPARTMENT.

THE RECTANGULAR LADDER TUNNEL WILL BE CONSTRUCTED ENTIRELY FROM A HIGH IMPACT POLYPROPYLENE MATERIAL. THE TOP AND SIDEWALLS WILL BE CONSTRUCTED FROM 3/4" (.750) MATERIAL WHILE THE FLOOR IS CONSTRUCTED FROM 1" THICK MATERIAL. ALL FOUR SIDES WILL BE INTERNALLY SEAM WELDED TO THE WATER TANKS STRUCTURE.

THE EQUIPMENT STORAGE COMPARTMENT WILL BE CONSTRUCTED OF 3/16" (.1875") 5052-H52 MARINE GRADE ALUMINUM AND DESIGNED TO ACCOMMODATE THE NFPA REQUIRED EQUIPMENT. THE COMPARTMENT WILL HOUSE ONE (1) 24' EXTENSION LADDER, ONE (1) 14' ROOF LADDER, ONE (1) 10' FOLDING LADDER AND UP TO FOUR (4) PIKE POLES. THE COMPARTMENT WILL BE SUPPORTED EXTERNALLY BOTH FORE AND AFT AND WILL NOT TOUCH THE WATER TANK SLEEVE AT ANY POINT. THE COMPLETE ASSEMBLY WILL BE EASILY REMOVABLE IN THE EVENT THAT SERVICE TO THE WATER TANK BECOMES NECESSARY.

INDIVIDUAL STORAGE COMPARTMENTS CONSTRUCTED FROM THE SAME HIGH-GRADE MATERIAL AS THE OUTER STRUCTURE WILL BE SUPPLIED. ALL PARTITIONED FLOOR AREAS WILL BE OVERLAID WITH 1/4" PVC FLAT STOCK TO FACILITATE THE REMOVAL OF EACH COMPONENT.

INDIVIDUAL PIKE POLE TUBES WILL BE MANUFACTURED FROM ALUMINUM TUBING AND WILL BE DESIGNED WITH A SLOT SECURING EACH PIKE POLE IN PLACE.

TO INSURE RELIABILITY AND THE ABILITY TO CONSTRUCT THIS TYPE OF STORAGE SYSTEM, THE BODY MANUFACTURER AND THE MANUFACTURER OF THE WATER TANK WILL SUBMIT A REAR VIEW LINE DRAWING AND A MINIMUM LIST OF 50 UNITS WITH THE LADDER STORAGE CONFIGURATION IN SERVICE. FAILURE TO PROVIDE THIS INFORMATION WITH THE BID WILL BE REASONABLE CAUSE FOR THE REJECTION OF THE BID.

**RUNNING BOARDS AND STEPS**

ALL RUNNING BOARD AND STEP SURFACES WILL BE IN COMPLIANT WITH THE CURRENT VERSION OF NFPA 1901.

**PUMP PANEL**

THE OPERATOR'S CONTROLS AND GAUGES WILL BE MOUNTED ON A PUMP PANEL CONSTRUCTED OF .125" BLACK ANODIZED, NON-GLARE ALUMINUM. NO VINYL COVERINGS WILL BE ACCEPTABLE AS THESE SURFACES ARE SUSCEPTIBLE TO ROUGH USAGE AND MAY CAUSE THE COVERING TO TEAR.

THE OPERATOR'S MASTER GAUGE PANEL WILL HAVE A VERTICAL STAINLESS STEEL HINGE INSTALLED AT THE LEFT SIDE OF THE PANEL WITH A LATCH AT THE RIGHT TO PROVIDE ACCESS TO THE GAUGES FOR SERVICING.

THE UPPER PORTION OF THE RIGHT SIDE PUMP PANEL WILL HAVE HINGED DOUBLE DOORS FOR ACCESS TO THE PUMP COMPARTMENT AND PRIMER RESERVOIR. THE DOORS WILL BE CONSTRUCTED OF .125" ALUMINUM TREADPLATE.

THE CONTROLS AND INSTRUMENTS WILL BE PROVIDED AND INSTALLED AS A GROUP AT THE PUMP PANEL. THE CENTRAL MIDPOINT OR CENTERLINE OF ANY VALVE CONTROL WILL BE NO MORE THAN 72" VERTICALLY ABOVE THE GROUND OR PLATFORM THAT IS DESIGNED TO SERVE AS THE OPERATOR'S STANDING POSITION. THESE INSTRUMENTS WILL BE PLACED TO KEEP THE PUMP OPERATOR AS FAR AS PRACTICAL FROM ALL DISCHARGE AND INTAKE CONNECTIONS AND IN A LOCATION WHERE THEY ARE READILY VISIBLE AND OPERATIONALLY FUNCTIONAL WHILE THE OPERATOR REMAINS STATIONARY.

EIGHT (8)

**BODY MODIFICATION - INCREASE**

A SPECIAL ENGINEERING COMPARTMENT HEIGHT MODIFICATION SHALL BE DETERMINED IN ONE-INCH INCREMENTS.

ONE (1)

**FULL HEIGHT REAR COMPARTMENT**

THE REAR COMPARTMENT OF THE APPARATUS SHALL HAVE A REAR DOOR CONFIGURATION THAT EXTENDS FROM THE LOWER COMPARTMENT TO BELOW THE HOSE BED. THE EXACT DIMENSIONS AND STORAGE CAPACITY IS COMPLETELY DESCRIBED IN THE "COMPARTMENT" SECTION OF THE SPECIFICATION.

ONE (1)

**BODY CORNER STONE GUARDS (PR) FULL LENGTH FRONT FACE EACH SIDE**

THERE SHALL BE A PAIR OF STONE GUARDS INSTALLED, ONE (1) EACH SIDE ON THE OUTER FACE OF THE FRONT FORWARD COMPARTMENT. STONE GUARDS SHALL BE 1/8" (.125") ALUMINUM TREADPLATE AND FASTENED SECURELY TO APPARATUS BODY TO PROTECT SURFACE FROM LOOSE GRAVEL.

ONE (1)

**WHEEL WELL AIR BOTTLE COMPARTMENT - (4)**

THERE SHALL BE FOUR (4) AIR BOTTLE COMPARTMENTS LOCATED IN THE REAR WHEEL WELL TWO (2) ON EACH SIDE. THE COMPARTMENTS SHALL BE FABRICATED FROM 1/8" (.125") SMOOTH ALUMINUM. THE ALUMINUM ROLLED AIR BOTTLE TUBE SHALL BE SUPPORTED AT THE OPENING BY SEAM WELDING THE TUBE TO THE WHEEL WELL. THE BOTTOM OF THE TUBE IS ALSO TO BE SUPPORTED TO ELIMINATE BREAKAGE FROM VIBRATION. THE TUBES ARE VENTED TO FACILITATE MOISTURE DRAINAGE. THE COMPARTMENT DOORS SHALL BE A CAST ALUMINUM DOOR WITH A POSITIVE MECHANICAL LATCH. THE BOTTOM OF THE COMPARTMENTS SHALL BE LINED WITH A MATERIAL TO PROTECT THE AIR BOTTLE FINISH.

ONE (1)

**ROBINSON ROLL-UP DOOR**

THERE SHALL BE ONE-(1) ROLL-UP COMPARTMENT DOOR MANUFACTURED BY ROBINSON INSTALLED AT THE CENTER REAR COMPARTMENT.

SLATS ARE TO DOUBLE-WALL (BOX FRAME) ALUMINUM EXTRUSION. EXTERIOR SURFACES ARE TO BE FLAT. INTERIOR SURFACES ARE TO BE CONCAVE TO PREVENT LOOSE EQUIPMENT FROM JAMMING DOORS. THE SLATS MUST BE ANODIZED TO ELIMINATE OXIDATION. THE SLATS ARE TO HAVE INNER-LOCKING END SHOES ON EVERY SLAT SECURED BY A PUNCH-DIMPLE PROCESS. THE SLATS ARE TO HAVE INTERLOCKING JOINTS WITH A FOLDING LOCKING FLANGE. BETWEEN EACH SLAT SHALL BE A PVC/VINYL INNER SEAL TO PREVENT ANY METAL-TO-METAL CONTACT.

THE TRACK SHALL BE ONE-PIECE ALUMINUM, WHICH HAS AN ATTACHING FLANGE AND FINISHING FLANGE INCORPORATED INTO ITS DESIGN, WHICH PROVIDES A FINISH LOOK TO INSTALLATION WITHOUT ADDITIONAL TRIM OR CAULKING. THE TRACK IS TO HAVE A REPLACEABLE SIDE SEAL. THE SIDE SEAL SHALL PREVENT WATER AND DUST INTRUSION INTO THE COMPARTMENT.

THERE SHALL BE AN ALUMINUM DRIP RAIL ABOVE THE COMPARTMENT DOOR WITH A BUILT IN REPLACEABLE WIPER SEAL.

THE ROLL-UP DOOR SHALL HAVE A COUNTER BALANCE TO ASSIST IN LIFTING AND ELIMINATE THE RISK OF ACCIDENTAL CLOSING.

A FULL WIDTH LIFT BAR, OPERABLE BY ONE HAND, SHALL BE USED AS A POSITIVE LATCH DEVICE FOR SECURING THE COMPARTMENT DOOR IN THE CLOSED POSITION.

THE OUTSIDE DOOR SHALL HAVE A NATURAL FINISH.

ONE (1)

**ANODIZED ALUMINUM SILL PLATES**

THERE SHALL BE AN ANODIZED ALUMINUM SILL PLATE INSTALLED UNDER THE COMPARTMENT DOOR.

ONE (1)

**BODY TRIM**

THE STANDARD BODY TRIM SHALL INCLUDE THE FOLLOWING:

- THERE SHALL BE 1/8" (.125") ALUMINUM TREADPLATE INSTALLED OVER ALL SIDE COMPARTMENT TOPS TO PROVIDE A DRIP RAIL OVER THE COMPARTMENT DOOR OPENINGS.
- A DRIP RAIL SHALL BE LOCATED OVER EACH COMPARTMENT DOOR. THIS DRIP RAIL SHALL FORM A LIP OVER THE EXTERIOR DOOR PANS TO PREVENT WATER FROM RUNNING INTO A COMPARTMENT.
- THE VERTICAL REAR FACE OF THE BODY SHALL BE COVERED WITH ALUMINUM TREADPLATE.
- TWO (2) HANDRAILS SHALL BE LOCATED ON THE REAR BEAVERTAILS; ONE HANDRAIL PER BEAVERTAIL. EACH HANDRAIL SHALL BE CONSTRUCTED OF 1-1/4" RIBBED ALUMINUM TUBING, WITH CHROME END STANCHIONS. EACH HANDRAIL SHALL BE SUFFICIENT IN LENGTH TO MEET ALL STANDARD REQUIREMENTS.
- TWO (2) STANCHIONS SHALL BE MOUNTED AT THE REAR OF THE APPARATUS HOSEBED, ONE (1) EACH SIDE. THE STANCHIONS SHALL BE 11"L X 3.75"W AND MANUFACTURED OUT OF POLISHED CAST ALUMINUM. STAINLESS STEEL SCUFF PLATES SHALL BE INSTALLED IN THE HOSEBED AREA TO PREVENT DEPLOYING HOSE FROM DAMAGED ON STANCHION SUPPORTS. THE STANCHIONS SHALL PROVIDE MOUNTING POSITIONS FOR THE ZONE C WARNING LIGHTS AND ADDITIONAL HOSEBED LIGHTING. ALL WIRING FOR THE UPPER REAR LIGHTING SHALL BE CONCEALED INSIDE THE STANCHIONS.

ONE (1)

**FUEL FILL- RECESSED WITH DOOR**

THERE SHALL BE A CAST ALUMINUM RECESSED FUEL FILL ASSEMBLY WITH A NON-LOCKING DOOR MOUNTED ON THE LEFT SIDE OF THE APPARATUS BODY. THE FUEL FILL ASSEMBLY SHALL BE EQUIPPED WITH A FUEL FILL CAP, RETENTION RING AND A CPI CAST ALUMINUM DOOR. THE ASSEMBLY SHALL BE PROPERLY LABELED "DIESEL FUEL ONLY".

ONE (1)

**RUNNING BOARDS**

RIGHT SIDE W/ SUCTION HOSE TRAY

ONE SUCTION HOSE TRAY SHALL BE INSTALLED IN THE RUNNING BOARD ON THE RIGHT SIDE OF THE PUMP MODULE. THE TRAY SHALL BE APPROXIMATELY 8" WIDE X 45" LONG X 10" DEEP. THE HOSE TRAY SHALL BE CONSTRUCTED OF 1/8" ALUMINUM SMOOTH PLATE AND HAVE A HOLE IN EACH CORNER FOR WATER DRAINAGE. THE TRAY SHALL HOLD APPROXIMATELY THIRTY FIVE-(35) FEET OF 5" SOFT SUCTION OR APPROXIMATELY ONE HUNDRED (100) FEET OF 1 1/2" DOUBLE JACKET HOSE. THE HOSEWELL SHALL HAVE A RESTRAINING STRAP WITH QUICK RELEASE BUCKLE.

LEFT SIDE

THE LEFT SIDE RUNNING BOARD SHALL BE CONSTRUCTED OF FIRE APPARATUS QUALITY 3/16" (.1875") ALUMINUM TREADPLATE. THE TREADPLATE SHALL BE FLANGED DOWN 2.50" AND IN 1.00" TO MAXIMIZE STRENGTH AND RIGIDITY.

THE RUNNING BOARDS SHALL BE BOLTED ON FOR REMOVAL OR REPLACEMENT.

ONE (1)

**INTERMEDIATE HANDRAIL**

THERE SHALL BE AN INTERMEDIATE HANDRAIL SUPPLIED AND INSTALLED ON THE APPARATUS. THE HANDRAIL SHALL BE MADE OUT OF 1-1/4" RIBBED ALUMINUM. THE HANDRAIL SHALL BE MOUNTED BELOW THE HOSE BED AND ABOVE THE CENTER REAR COMPARTMENT. THE HANDRAIL SHALL BE MOUNTED WITH CHROME PLATED END STANCHIONS.

FOUR (4)

**HANDRAILS**

THERE SHALL BE FOUR (4) RIBBED ALUMINUM HANDRAILS INSTALLED ON THE FRONT FACE OF THE COMPARTMENTS. THEY SHALL BE APPROXIMATELY 12" IN LENGTH. THE HANDRAIL(S) SHALL HAVE CHROME PLATED END STANCHIONS.

ONE (1)

**ALUMINUM/HYPALON CROSSLAY COVER**

THERE SHALL BE AN ALUMINUM COVER FOR THE DOUBLE CROSSLAY HOSE BED. THE COVER SHALL BE CONSTRUCTED OF 1/8" (.125") ALUMINUM TREADPLATE AND SECURED WITH STAINLESS STEEL PIANO HINGE. THE COVER SHALL OPEN FROM THE CENTER OF THE BODY AND SWING FORWARD TO THE FRONT OF THE BODY. THE COVER SHALL HAVE CHROME HANDLES AT THE ENDS OF THE COVER, BE SECURED WITH TWO (2) CHROME HOOK LATCHES.

ONE (1)

THE HYPALON END FLAPS SHALL BE SECURED AT THE BOTTOM USING TWO VELCRO STRAPS EACH SIDE, TOTAL OF FOUR. THE COVERS SHALL COMPLETELY PROTECT AND PREVENT THE HOSE FROM INADVERTENTLY DEPLOYING DURING NORMAL OPERATION.

THE COVER SHALL MEET THE TIA 03-1 NFPA REQUIREMENT.

ONE (1)

THE END FLAPS SHALL BE RED IN COLOR.

ONE (1)

**ALUMINUM/HYPALON HOSE BED COVER**

A 1/8" (.125") ALUMINUM TREADPLATE HOSE BED COVER SHALL BE PROVIDED. COVER SHALL BE TWO (2) DOOR TYPES WITH CONTINUOUS STAINLESS STEEL HINGE ALONG EACH SIDE. HOSEBED COVER DOORS SHALL HAVE CHROME ASSIST HANDLES AND DOOR HOLD OPEN SPRINGS. AN OPEN DOOR INDICATOR SWITCH SHALL BE PROVIDED AND WIRED THE DOOR AJAR SYSTEM IN THE CAB.

TWO (2) HYPALON END COVERS SHALL BE PROVIDED FOR EACH TREADPLATE COVER. THE COVERS SHALL BE CONSTRUCTED OF 16 OZ. HEAVY-DUTY, FIRE RETARDANT (CRISSCROSSED) REINFORCED NYLON.

ONE (1)

THE HYPALON END FLAPS SHALL BE SECURED AT THE BOTTOM USING PUSH PINS. THE COVERS SHALL COMPLETELY PROTECT THE HOSE AND PREVENT THE HOSE FROM INADVERTENTLY DEPLOYING DURING NORMAL OPERATION.

THE COVER SHALL MEET THE TIA 03-1 NFPA REQUIREMENT.

ONE (1)

THE END FLAPS SHALL BE RED IN COLOR.

ONE (1)

**HOSE BED DIVIDER**

ONE (1) HOSE BED DIVIDER SHALL BE MANUFACTURED FROM 1/4" (.250") SMOOTH ALUMINUM PLATE WITH AN EXTRUDED ALUMINUM BASE WELDED TO THE BOTTOM. THE DIVIDER SHALL HAVE AN EXTRUDED TRACK TO SLIDE IN TO ALLOW THE HOSE BED TO ADJUST FOR DIFFERENT HOSE CAPACITIES. ONE END OF THE DIVIDER SHALL HAVE A 3" RADIUS CORNER. THE DIVIDER SHALL BE SANDED TO PREVENT DAMAGE TO HOSE.

ONE (1)

**HOSE BED CAPACITY**

| QUANTITY | SIZE OF HOSE | BRAND NAME OF HOSE |
|---|---|---|
| 1200' | 5" | LDH |
| 800' | 2.5" | DJ |

SIX (6)

**ADJUSTABLE SHELF**

THERE SHALL BE SIX (6) ADJUSTABLE SHELF(VES) MADE FROM .1875 SMOOTH ALUMINUM. THE TRAY SHALL BE APPROXIMATELY 37-48"W X 12"D. THE ADJUSTABLE TRACK SHALL BE MADE FROM ALUMINUM EXTRUSIONS AND RUN THE FULL HEIGHT OF THE COMPARTMENT. EACH SHELF SHALL HAVE A 2" LIP ON ALL SIDES FOR ADDED STRENGTH.

SIX (6)

**CHROME-FOLDING STEPS**

THERE SHALL BE SIX (6) LARGE CHROME-FOLDING STEPS WITH A MINIMUM SURFACE AREA OF THIRTY-FIVE (35) SQUARE INCHES. THE STEP SHALL BE MOUNTED THREE STEPS ON EACH SIDE OF THE APPARATUS ON THE FRONT FACE OF THE FORWARD COMPARTMENT. ADEQUATE HANDRAILS SHALL BE PROVIDED AND INSTALLED AS DIRECTED BY THE FIRE DEPARTMENT.

THREE (3)

**REAR STEP/ STEP LIGHTS**

THERE SHALL BE THREE (3) REAR LIGHTED STEP(S) INSTALLED ON THE APPARATUS. THE STEP(S) SHALL BE CAST PRODUCTS AND HAVE A MINIMUM OF THIRTY-FIVE (35) SQUARE INCHES OF SURFACE AREA TO CONFORM TO THE NFPA 1901 STANDARDS. THE STEP(S) SHALL INCLUDE A 12-VOLT INCANDESCENT LIGHT TO ILLUMINATE THE AREA BELOW.

THREE (3)

**ROLL-OUT TRAY**

THERE SHALL BE THREE (3) ROLL-OUT TRAY(S) SUPPLIED, MADE OUT OF 3/16" (.1875") SMOOTH ALUMINUM PLATE. THE TRAY SHALL BE APPROXIMATELY 37" - 48"W X 24"D. THE TRAY(S) SHALL HAVE A 3" LIP AT THE FRONT AND REAR FOR ADDED STRENGTH AND MOUNTED ON GRANT SLIDES WITH A COMBINED CAPACITY OF 250 POUNDS. THE TRAY(S) SHALL BE MOUNTED IN A COMPARTMENT SPECIFIED BY THE DEPARTMENT.

ONE (1)

**ELECTRICAL SYSTEM**

**BODY ELECTRICAL**

THE BODY ELECTRICAL SYSTEM SHALL BE DESIGNED AS AN INTEGRATED ELECTRICAL PACKAGE SPECIFICALLY ENGINEERED FOR FIRE APPARATUS APPLICATION. THE INTEGRATED ELECTRICAL SYSTEM SHALL BE COMPRISED OF CENTRAL POWER DISTRIBUTION PANELS, WHICH INTERFACE WITH THE BODY AND CHASSIS THROUGH AN ENGINEERED HARNESS SYSTEM.

**DISTRIBUTION PANELS**

THE ELECTRICAL DISTRIBUTION PANEL AND CIRCUITS MUST BE HOUSED IN A SEALED ENCLOSURE. ALL CIRCUIT ENTRY POINTS TO THE DISTRIBUTION PANEL MUST BE MADE THROUGH LOCKING BULKHEAD

STYLE CONNECTORS, WHICH ARE SEALED AT THE PANEL WALL BY FORMED GASKET. THE DISTRIBUTION PANEL SHALL INCORPORATE A SEALED BULKHEAD STYLE STUD FOR THE MAIN POWER SOURCE CONNECTION TO THE INTERNAL CIRCUITS. A GROUNDING STUD SHALL BE INCORPORATED ONTO THE PANEL ENCLOSURE.

ALL INTERNAL WIRE END TERMINALS, INCLUDING LOCKING BULKHEAD CONNECTORS, SHALL BE MECHANICALLY AFFIXED TO THE WIRE ENDS BY MACHINE TERMINAL CRIMPING PRESSES. NO HAND-CRIMPED TERMINALS SHALL BE ACCEPTABLE.

ALL INTERNAL SPLICES SHALL BE ULTRASONICALLY WELDED CONNECTIONS - NO BUTT STYLE CONNECTIONS SHALL BE ACCEPTABLE IN THE MAIN BODY HARNESS. ALL INTERNAL WIRING SHALL BE OF THE HIGH TEMPERATURE GXL TYPE WIRE AND SHALL BE PROTECTED BY WIRING DUCT WHEREVER POSSIBLE.

THE ELECTRICAL DISTRIBUTION PANEL SHALL CONSIST OF SEVEN-(7) POWER DISTRIBUTION RELAYS. THE POWER DISTRIBUTION RELAYS SHALL BE REPLACEABLE, SPDT AUTOMOTIVE STYLE, RATED AT A MINIMUM OF 30 AMPERES.
THE POLARITY OF THE (POWER DISTRIBUTION) RELAY CIRCUIT IS SELECTABLE AND CAN BE SET FOR EITHER POSITIVE OR GROUND INPUT. EACH RELAY SHALL BE PROTECTED BY AN APPROPRIATELY RATED CIRCUIT BREAKER.

DIAGNOSTIC LED'S SHALL BE PRESENT TO INDICATE WHEN THE SWITCH INPUT IS ACTIVATED, THE POLARITY OF THE SWITCH ACTIVATION SIGNAL, POWER TO THE RELAY BUSS, AND POWER THROUGH THE RELAY WHEN ACTIVATED.

THE POWER DISTRIBUTION RELAYS SHALL INCORPORATE SEPARATE INPUTS, WHICH ARE ABLE TO ACCEPT OUTPUTS FROM A LOAD MANAGEMENT SYSTEM. THE LOAD MANAGEMENT INPUTS MUST ALLOW FOR THE ADDITION OF A LOAD MANAGEMENT SYSTEM BEFORE, DURING, OR AFTER THE TIME OF DELIVERY WITHOUT REQUIRING A REWIRING OF THE EXISTING DISTRIBUTION PANEL CIRCUITS. THE INPUT SWITCH DIAGNOSTIC LED'S SHALL BE CONFIGURED SO THAT THE INDICATOR IS CONTROLLED BY THE LOAD MANAGEMENT INPUTS.

CONNECTIONS TO THE DISTRIBUTION PANEL SHALL UTILIZE SPRING LOADED "CAGE CLAMP" STYLE CONNECTORS (WAGO OR EQUIVALENT) WHEREVER POSSIBLE. SCREW CLAMP TYPE CONNECTIONS ARE NOT ACCEPTABLE.

THE ELECTRICAL DISTRIBUTION PANEL SHALL INCORPORATE A PUMP INTERLOCK MODULE. THE MODULE SHALL CONTROL THE INTERLOCK CIRCUIT TO MEET THE CURRENT NFPA PUMP ENGAGEMENT REQUIREMENTS. DIAGNOSTIC LED'S SHALL BE PRESENT TO INDICATE THE INTERLOCK SIGNALS OF PARK-BRAKE, NEUTRAL, PUMP-IN-GEAR AND O.K.-TO-PUMP CIRCUITS.

THE PUMP INTERLOCK MODULE SHALL BE PROGRAMMABLE TO ACCEPT THE SPECIFIC INPUT POLARITY OF THE INTERLOCK SIGNALS TO MINIMIZE THE USE OF REDUNDANT INVERTING CIRCUITS.

THE DISTRIBUTION PANEL SHALL ALSO CONTAIN CIRCUIT'S ANCILLARY TO THE REQUIRED DOT SIGNALS AND OTHER BODY FUNCTIONS.

THE COMPLETE BODY ELECTRICAL SYSTEM SHALL BE 100% DOCUMENTED AND CONTAIN INDEPENDENT CIRCUIT DIAGRAMS WITH POINT TO POINT WIRING INFORMATION, AS SHALL AS A GENERAL COMPONENT DIAGRAM ATTACHED TO THE INSIDE COVER OF THE DISTRIBUTION PANEL ENCLOSURE.

THE BODY ELECTRICAL PANEL SHALL BE CAPABLE OF BEING COMPLETELY DISCONNECTED AND FULLY TESTED BY A COMPUTERIZED CIRCUIT ANALYZER. A COMPUTER PRINTOUT OF THE TESTED ENCLOSURE SHALL BE PROVIDED UPON REQUEST.

ALL ELECTRICAL EQUIPMENT SWITCHES SHALL BE MOUNTED ON A SWITCH PANEL MOUNTED IN THE CAB CONVENIENT TO THE DRIVER. LIGHT SWITCHES SHALL BE OF THE ROCKER TYPE WITH INTEGRAL INDICATOR LIGHT TO SHOW WHEN LIGHTS ARE ENERGIZED. ALL SWITCHES SHALL BE APPROPRIATELY IDENTIFIED.

ONE (1)

**VOLT TESTING**

THE APPARATUS LOW VOLTAGE SYSTEM SHALL BE TESTED AND CERTIFIED. A COPY OF CERTIFICATION SHALL BE PROVIDED TO THE PURCHASER WITH THE APPARATUS.

- RESERVE CAPACITY TEST
- THE UNIT SHALL BE RUN UNTIL ALL ENGINES, ENGINE COMPARTMENT TEMPERATURES ARE STABILIZED, AND THE BATTERY SYSTEM IS FULLY CHARGED. THE ENGINE SHALL BE SHUT OFF AND THE MINIMUM CONTINUOUS ELECTRICAL LOAD BE ACTIVATED FOR TEN-(10) MINUTES. ALL ELECTRICAL LOADS SHALL BE SHUTOFF AFTER TEN-(10) MINUTES AND THE BATTERY SYSTEM SHALL THEN BE CAPABLE OF RESTARTING THE ENGINE.
- ALTERNATOR PERFORMANCE TEST AT IDLE
- MINIMUM CONTINUOUS ELECTRICAL LOADS SHALL BE ACTIVATED WHILE THE UNIT IS AT IDLE SPEED.
- ALTERNATOR PERFORMANCE TEST AT FULL LOAD
- THE TOTAL CONTINUOUS ELECTRICAL LOAD SHALL BE ACTIVATED WITH THE ENGINE RUNNING UP TO THE MANUFACTURER'S GOVERNED SPEED. THE TEST DURATION SHALL BE A MINIMUM OF TWO-(2) HOURS. ACTIVATION OF THE LOAD MANAGEMENT SYSTEM SHALL BE PERMITTED DURING THE TEST. IF HOWEVER, AN ALARM IS SOUNDED BY EXCESSIVE BATTERY DISCHARGE AS DETECTED BY THE SYSTEM OR A SYSTEM VOLTAGE OF LESS THAN 11.8 VOLTS DC FOR A 12-VOLT NOMINAL SYSTEM FOR MORE THAN 120 SECONDS, SHALL BE CONSIDERED A TEST FAILURE.
- LOW VOLTAGE ALARM TEST
- THE ENGINE SHALL BE SHUT OFF AND THE TOTAL CONTINUOUS ELECTRICAL LOAD SHALL BE ACTIVATED AND CONTINUE TO BE APPLIED UNTIL THE EXCESSIVE BATTERY DISCHARGE ALARM ACTIVATES. THE TEST SHALL BE CONSIDERED A FAILURE IF THE ALARM HAS NOT SOUNDED WITHIN 140 SECONDS AFTER THE VOLTAGE DROPS TO 11.8 VOLTS.

ONE (1)

**EMI/RFI PROTECTION**

THE APPARATUS SHALL BE MANUFACTURED TO INCORPORATE THE LATEST DESIGNS IN THE ELECTRICAL SYSTEM WITH COMPONENTS THAT ARE STATE OF THE ART TO INSURE ELECTROMAGNETIC INTERFERENCE (EMI) AND RADIO FREQUENCY INTERFERENCE (RFI) EMISSIONS ARE SUPPRESSED AT THE SOURCE.

THE APPARATUS SHALL HAVE THE ABILITY TO OPERATE IN TYPICAL FIRE AND RESCUE SITUATIONS WITH NO ADVERSE EFFECTS FROM EMI AND/OR RFI.

THE APPARATUS SHALL UTILIZE COMPONENTS THAT ARE FULLY PROTECTED AND WIRING THAT UTILIZES SHIELDING AND LOOP BACKGROUNDS WHERE REQUIRED TO CONTROL EMI/RFI SUSCEPTIBILITY. THE APPARATUS SHALL BE BONDED THROUGH GROUND STRAPS. RELAYS AND SOLENOIDS THAT ARE SUSPECT TO GENERATING SPURIOUS ELECTROMAGNETIC RADIATION ARE DIODE AND/OR RESISTOR PROTECTED TO PREVENT TRANSIENT VOLTAGE SPIKES.

IN ORDER TO PREVENT THE RADIO FREQUENCY INTERFERENCE COMPLETELY THE PURCHASER SHALL BE REQUESTED TO PROVIDE A LISTING OF THE TYPE, POWER OUTPUT, AND FREQUENCIES OF ALL RADIO AND BIO MEDICAL EQUIPMENT THAT IS PROPOSED TO BE USED ON THE APPARATUS.

ONE (1)

**LEFT SIDE PUMP PANEL LIGHT**

THREE (3) INDIVIDUAL WELDON MODEL 2025-7100-30 LIGHT FIXTURES WITH ON/OFF SWITCH SHALL BE MOUNTED UNDER A POLISHED ALUMINUM LIGHT SHIELD EXTRUSION. THE LIGHTS SHALL BE MOUNTED AT THE UPPER PORTION OF THE PUMP PANEL TO GIVE THE BEST LIGHT FOR NIGHT OPERATIONS. THE SWITCH SHALL BE LOCATED ON THE OPERATOR'S PANEL FOR EASY ACCESS.

ONE (1)

**RIGHT SIDE PUMP PANEL LIGHT**

THREE (3) INDIVIDUAL WELDON MODEL 2025-7100-30 LIGHT FIXTURES WITH ON/OFF SWITCH SHALL BE MOUNTED UNDER A POLISHED ALUMINUM LIGHT SHIELD EXTRUSION. THE LIGHTS SHALL BE MOUNTED AT THE UPPER PORTION OF THE PUMP PANEL TO GIVE THE BEST LIGHT FOR NIGHT OPERATIONS. THE SWITCH SHALL BE LOCATED ON THE OPERATOR'S PANEL FOR EASY ACCESS.

ONE (1)

**WHELEN PUMPER PACKAGE 3**

THE FULLY COMPLIANT NFPA LIGHTING PACKAGE IS A COMBINATION OF LED AND HALOGEN ROTATING LIGHTS. THIS PACKAGE MEETS ALL ZONE REQUIREMENTS OF NFPA 1901 STANDARDS.

ONE (1)

**LIGHTBAR - WHELEN - MODEL FN72VLED**

A WHELEN MODEL FN72VLED LED LIGHTBAR SHALL BE MOUNTED ON THE CAB ROOF. THE LIGHTBAR SHALL MEASURE 72" IN LENGTH AND POSITIONED AS FAR FORWARD AS POSSIBLE. THE LIGHTBAR SHALL HAVE FOUR-(4) CORNER RED LINEAR 12'S AND FOUR-(4) FRONT LINEAR 8'S (2 RED / 2 WHITE).

THE LIGHTBAR SHALL BE CONTROLLED IN THE FOLLOWING MANNER:

CALLING FOR RIGHT OF WAY - ALL POSITIONS
BLOCKING RIGHT OF WAY - CLEAR SHALL NOT BE ACTIVE

THE LIGHTS SHALL BE ACTIVATED BY A SINGLE EMERGENCY LIGHT SWITCH LOCATED ON THE MASTER LIGHT SWITCH PANEL IN THE CAB.

THE LIGHTBAR SHALL MEET NFPA 1901 EDITION AS CONFIGURED.

ONE (1)

**LIGHTS - WHELEN 600 LED - ZONE C - REAR LOWER**

THERE SHALL BE A PAIR OF WHELEN MODEL 60R00FRR LED LIGHTS AND MOUNT PROVIDED. THESE LIGHTS SHALL BE MOUNTED ON THE REAR FACE OF THE UNIT DIRECTLY ABOVE THE TAILLIGHT ASSEMBLY, ONE (1) EACH SIDE OF THE APPARATUS, AS RECOMMENDED BY NFPA. THE COLOR SHALL BE RED.

ONE (1)

**LIGHTS - WHELEN 600 LED - ZONE B & D - LOWER**

THERE SHALL BE TWO (2) PAIR OF WHELEN MODEL 60R00FRR LED LIGHTS AND MOUNT PROVIDED. THESE MID SHIP OPTICAL WARNING DEVICES SHALL BE MOUNTED ON BOTH THE LEFT AND RIGHT LOWER SIDES OF THE APPARATUS WITH THE OPTICAL CENTER OF THE DEVICE AT A DISTANCE OF 18" TO 62" ABOVE GROUND NOT TO EXCEED 25' BETWEEN OPTICAL WARNING DEVICES. THE COLOR SHALL BE RED.

ONE (1)

**LIGHTS - WHELEN 600 LED - (PR.)**

THERE SHALL BE A PAIR OF WHELEN MODEL 60R00FRR LED LIGHTS PROVIDED. THIS OPTICAL WARNING DEVICE SHALL BE MOUNTED IN A LOCATION SPECIFIED BY THE FIRE DEPARTMENT. THE COLOR SHALL BE RED.

ONE (1)

**BEACON - WHELEN B6TMRR1P LED - ZONE C - REAR UPPER**

THERE SHALL BE ONE (1) PAIR WHELEN MODEL B6TMRR1P LED LIGHTS PROVIDED WITH THE APPARATUS. THIS LIGHT SHALL INCLUDE A RED DIRECTIONAL LINEAR LED LIGHT IN THE LOWER SECTION, AND A ROTATING BEACON IN THE UPPER SECTION. THE LIGHTS SHALL BE HOUSED IN A SINGLE POLISHED ALUMINUM FIXTURE. THE LENS COLOR SHALL BE RED.

ONE (1)

**3M OPTICOM**

THERE SHALL BE ONE-(1) 3M OPTICOM (MODEL 9592H) INSTALLED IN THE LIGHTBAR AND CONTROLLED BY A SWITCH IN THE CAB. THE UNIT SHALL OPERATE IN ACCORDANCE WITH THE CURRENT NFPA REQUIREMENTS.

TWO (2)

**SCENE LIGHTS**

THERE SHALL BE A TWO PAIR OF WHELEN MODEL 60K000XR 26 DEGREE SCENE LIGHTS PROVIDED. EACH SCENE LIGHT SHALL HAVE A WIDE ANGLE, DIRECTIONAL HALOGEN LIGHT HEAD WITH A TWIST-LOCK FIELD RE-LAMPABLE ASSEMBLY AND CHROME PLATED TRIM RING FLANGE. THE LIGHTS SHALL BE CONTROLLED BY A SWITCH LOCATED IN THE CAB. THE LENS COLOR SHALL BE CLEAR.

LOCATION TO BE AT FRONT OF BODY ONE EACH SIDE AND ONE EACH SIDE OF CAB ABOVE GRILLE.

ONE (1)

**CLEARANCE LIGHTS AND REFLECTORS**

CLEARANCE LIGHTS AND REFLECTORS SHALL BE TRUCK LITE LED LIGHTS, WHICH INCLUDE (2) RED MARKER LIGHTS, (4) RED RECTANGULAR REFLECTORS, (2) AMBER RECTANGULAR REFLECTORS AND (1) RED THREE LIGHT CLUSTER RECESSED IN THE REAR STEP.

ONE (1)

**WHELEN STOP, TURN (LED) AND BACK-UP (HALOGEN) LIGHTS**

STOP, TURN, AND BACKUP LIGHTS SHALL BE WHELEN 600 SERIES, INDIVIDUAL FIXTURES. FIXTURES SHALL BE MOUNTED ON EACH REAR FACE OF THE BODY RECESSED IN MODEL TH64, HIGHLY POLISHED, ALUMINUM TRIM RING. THE RED STOP (LED) LIGHT SHALL BE MODEL 60R00BRR, TURN LIGHT SHALL BE A MODEL 60A00TAR AMBER (LED) TYPE WITH DIRECTIONAL ARROW, AND THE BACKUP LIGHT SHALL BE MODEL 60J000CU CLEAR HALOGEN LIGHT TYPE.

ONE (1)

**LICENSE PLATE LIGHT**

CHROME LICENSE PLATE LIGHT SHALL BE INSTALLED ON THE REAR OF THE VEHICLE.

ONE (1)

**UNITY DECK LIGHTS (PR)**

TWO-(2) 6" CHROME PLATED DECK LIGHTS WITH SWIVEL MOUNT SHALL BE INSTALLED ONE-(1) EACH SIDE AT THE REAR OF THE APPARATUS. EACH LIGHT SHALL BE MANUALLY OPERATED AND SWITCHED ON AND OFF AT THE LIGHT. ONE-(1) HALOGEN SPOT LIGHT BULB WITH 160,000-CANDLEPOWER SHALL BE SUPPLIED. ONE-(1) HALOGEN FLOOD LIGHT BULB WITH A 6,000 CANDLEPOWER SHALL BE SUPPLIED.

ONE (1)

**PUMP COMPARTMENT LIGHT**

THERE SHALL BE ONE (1) COMPARTMENT LIGHT WITH SWITCH SHALL BE INSTALLED TO ILLUMINATE THE PUMP AREA FOR SERVICE.

ONE (1)

**CAB MAP LIGHT**

ONE (1) CAB MAP LIGHT SHALL BE PROVIDED. THE LIGHT SHALL BE OF THE GOOSENECK TYPE AND OPERATED FROM THE LIGHT. THE BULB AND LENS SHALL BE CLEAR.

ONE (1)

**SIREN - EQ2B**

THERE SHALL BE ONE-(1) FEDERAL MODEL EQ2B ELECTRONIC SIREN PROVIDED WITH ATTACHED NOISE CANCELING MICROPHONE. THE OPERATING MODES SHALL INCLUDE Q SIREN, WAIL, Q-YELP, Q-BRAKE PA/RADIO REBROADCAST AND DIGITALLY RECORDED AIR HORN. THE SIREN SHALL BE OPERATED FROM CONTROL PANEL IN CAB. THE UNIT SHALL INCLUDE ONE BP200 WATT SPEAKER TO ACHIEVE A SOUND OUTPUT LEVEL THAT MEETS CLASS "A" REQUIREMENTS WITH SQUARE STAINLESS STEEL "EF" STYLE GRILL. THE SPEAKER SHALL BE INSTALLED OUTBOARD THRU THE FRONT BUMPER DRIVER'S SIDE.

ONE (1)

THE ACTIVATION SWITCH SHALL BE WIRED THRU THE CHASSIS PARK BRAKE AND OPERATE IN THE "RESPONSE MODE" ONLY.

ONE (1)

**SIREN FOOT SWITCHES**

THERE SHALL BE TWO FLOOR MOUNTED FOOT SWITCHES TO OPERATE THE SIREN. THE SWITCHES SHALL BE MOUNTED ONE (1) ON THE DRIVER'S SIDE IN THE CAB AND ONE (1) MOUNTED ON THE OFFICER'S SIDE IN THE CAB. THE SWITCHES SHALL BE MOUNTED AS HIGH AND AS FAR OUTBOARD AS POSSIBLE.

ONE (1)

**COMPARTMENT LIGHTS**

EACH COMPARTMENT SHALL HAVE ONE (1) TRUCK LITE MODEL 80351, 5" DIAMETER SINGLE BULB COMPARTMENT LIGHT THAT SHALL BE ACTIVATED WHEN THE DOOR IS OPENED.

SEVEN (7)

**DOOR AJAR SYSTEM**

ALL APPARATUS BODY DOORS SHALL BE PROVIDED WITH AN AUTO DOOR SWITCH. THESE SWITCHES SHALL OPERATE THE COMPARTMENT INTERIOR LIGHTS AND ACTIVATE THE DOOR AJAR INDICATOR ON EACH SIDE OF APPARATUS BODY WHEN THE DOOR IS OPENED. THERE SHALL BE A RED DOOR AJAR LIGHT MOUNTED IN THE CAB, IN VIEW OF THE DRIVER TO INDICATE AN UNSECURED DOOR. THERE SHALL BE A BUZZER MOUNTED IN THE CAB THAT SHALL ALERT THE DRIVER.

ONE (1)

**BACK-UP ALARM**

THERE SHALL BE ONE-(1) ELECTRONIC BACK-UP ALARM INSTALLED AT THE REAR OF THE APPARATUS. THE ALARM SHALL BE WIRED TO THE TRANSMISSIONS OUTPUT SIGNAL AND IS AUTOMATICALLY ACTIVATED WHEN THE TRANSMISSION IS SHIFTED INTO REVERSE.

ONE (1)

**BODY PAINT FINISH**

THE BODY EXTERIOR SHALL HAVE NO MOUNTED COMPONENTS PRIOR TO PAINTING TO ASSURE FULL COVERAGE OF METAL TREATMENTS. BOX PAN COMPARTMENT DOORS SHALL BE PAINTED SEPARATELY TO ASSURE PROPER PAINT COVERAGE ON BODY, DOORJAMBS, AND DOOR EDGES.

ALL PAINTED SURFACES SHALL FOLLOW THE FOLLOWING PROCEDURE TO INSURE A LASTING FINISH:

- METAL SURFACES SHALL BE SANDED TO REMOVE ALL BURRS AND IMPERFECTIONS, BEFORE ETCHING AND TREATMENT.
- A WAX & GREASE SOLVENT SHALL BE USED TO CLEAN AND PREP THE ALUMINUM SURFACE. THE SURFACE SHALL THEN BE RINSED WITH FRESH WATER. THIS STEP REMOVES WAX, GREASE AND OTHER SURFACE CONTAMINANTS, THUS LEAVING A BRIGHT, CLEAN, AND CONDITIONED SURFACE.
- A SELF-ETCHING, METAL PRIMER SHALL BE APPLIED NEXT. THE SELF-ETCHING PRIMER SHALL FILL ALL OF THE MINOR IMPERFECTIONS, SCRATCHES, ETC. IN THE METAL. THIS STEP PRODUCES A CORROSION RESISTING CONVERSION COATING THAT PREVENTS OFF OXIDATION AND OTHER SURFACE CONTAMINANTS LEAVING A SURFACE THAT GIVES EXCELLENT PAINT ADHESION.
- A SANDABLE PRIMER SHALL BE SPRAYED ON THE METAL THAT SEALS THE SURFACE FOR THE POLYURETHANE PAINT. A MINIMUM COATING THICKNESS OF 2 MIL SHALL BE APPLIED. PRIMER IS THEN SANDED SMOOTH LEAVING THE BEST SURFACE FOR TOPCOAT.
- THE APPARATUS BODY SHALL THEN BE PAINTED WITH A MINIMUM OF THREE-(3) COATS OF COLOR.

THESE STEPS ARE FOLLOWED AS RECOMMENDED BY THE PAINT MANUFACTURER TO PROVIDE A LASTING AND HIGH QUALITY GLOSS FINISH. DUPONT SHALL PROVIDE ALL PAINT PRODUCTS.

ONE (1)

**PAINT COLOR CODE**

THE APPARATUS BODY PAINT CODE SHALL BE RED, B8241 UM ALT 3.

ONE (1)

**SCOTCHLITE STRIPE**

THERE SHALL BE A STRAIGHT 4" WIDE WHITE SCOTCHLITE STRIPE, WITH AN ADDITIONAL 1" WIDE STRIPE LOCATED ABOVE AND BELOW. THE STRIPES SHALL BE LOCATED NO HIGHER THAN 60" FROM THE GROUND INSTALLED ON THE APPARATUS CAB AND BODY. THE STRIPES SHALL COVER A MINIMUM OF SIXTY PERCENT (60%) OF EACH SIDE OF THE APPARATUS AND FORTY PERCENT (40%) OF THE FRONT AND REAR OF THE APPARATUS. THE STRIPE SHALL BE INSTALLED TO MEET THE CURRENT NFPA REQUIREMENTS.

ONE (1)

STRIPING SHALL BE WHITE ON THE RED PAINT, RED ON THE ROLL UP DOORS.

ONE (1)

**LETTERING**

THERE SHALL BE A MAXIMUM OF SIXTY (60) 3" TALL MYLAR LETTERS APPLIED TO THE APPARATUS. THE LETTERING SHALL ALSO HAVE A ONE COLOR MYLAR SHADE APPLIED.

ONE (1)

LETTERING SHALL BE GOLD IN COLOR.

ONE (1)

SHADING SHALL BE BLACK IN COLOR.

ONE (1)

STRIPE DESIGN - REVERSE "Z" (L1/R1)

ONE (1)

**MYLAR/GOLD LEAF STRIPE WITH OUTLINE TOP AND BOTTOM**

THERE SHALL BE A 3/4" GOLD LEAF STRIPE WITH A MYLAR OVERLAY APPLIED TO THE CHASSIS PAINT BREAK LINE. THE STRIPE SHALL HAVE A 1/8" PINSTRIPE ABOVE AND BELOW THE 3/4" STRIPE. COLOR SHALL MATCH ORIGINAL PINSTRIPE.

ONE (1)

**STRIPE - REAR REFLECTIVE**

FIFTY PERCENT OF THE REAR VERTICAL SURFACE OF THE UNIT SHALL BE OVERLAID WITH A REFLECTIVE MATERIAL, INSTALLED IN AN ALTERNATING "CHEVRON" PATTERN (SLOPING DOWN AND AWAY FROM THE CENTERLINE) AT A 45 DEGREE ANGLE, COLORS OF THE STRIPING SHALL BE DETERMINED BY THE FIRE DEPARTMENT IN COMPLIANCE WITH THE CURRENT ADDITION OF NFPA 1901.

THREE (3)

**DEDICATION PLAQUES (3)**

THREE (3) DEDICATION PLAQUES SHALL BE PROVIDED, TWO (2) INSTALLED ON THE APPARATUS ABOVE THE ROLL UP DOORS ON THE L-1 AND R-1 COMPARTMENTS, ONE (1) SHALL BE APPLIED TO CABINET GRADE MAHOGANY WOOD AND SHIPPED LOOSE WITH THE UNIT. THE FIRE DEPARTMENT SHALL PROVIDE PHOTOS OF THE STYLE OF PLAQUE.

ONE (1)

**PIKE POLE TUBE STYLE - FOUR**

FOUR ALUMINUM TUBES SHALL BE INSTALLED FOR STORING A PIKE POLE. ONE END SHALL BE NOTCHED TO ALLOW THE POLE TO BE LOCKED IN PLACE.

ONE (1)

**ZIAMATIC AIR PACK BRACKET**

ONE (1) ZIAMATIC MODEL #UN-6-30 AIR PACK BRACKET(S) SHALL BE PROVIDED WITH THE APPARATUS. AND MOUNTED AS DIRECTED BY THE FIRE DEPARTMENT.

FOUR (4)

**ZIAMATIC AIR PACK BRACKET**

FOUR (4) ZIAMATIC MODEL #QLM-U AIR PACK BRACKET SHALL BE PROVIDED WITH THE APPARATUS FOR EACH SCBA SEAT. THE BRACKET SHALL MEET NFPA 1901.

CUSTOMER TO SPECIFY LOCATION OF THE BRACKET.

ONE (1)

**10' FOLDING LADDER**

THERE SHALL BE ONE (1) ALCO-LITE MODEL FL-10, 10' FOLDING LADDER CONSISTING OF 1-SECTION ALUMINUM, LADDER WITH RUBBER FEET SUPPLIED WITH THE VEHICLE. LADDER SHALL MEET OR EXCEED THE LATEST NFPA STANDARDS.

ONE (1)

**14' ROOF LADDER**

THERE SHALL BE ONE (1) ALCO-LITE MODEL PRL-14, 14' ROOF LADDER OF SINGLE SECTION ALUMINUM, WITH FOLDING STEEL ROOF HOOKS ON ONE END AND STEEL SPIKES ON THE OTHER END SUPPLIED WITH THE VEHICLE. THE LADDER SHALL MEET OR EXCEED THE LATEST NFPA STANDARDS.

ONE (1)

**24' EXTENSION LADDER**

THERE SHALL BE ONE (1) ALCO-LITE MODEL PEL-24, 24' TWO-SECTION, ALUMINUM, EXTENSION LADDER WITH STEEL SPIKES SUPPLIED WITH THE VEHICLE. THE LADDER SHALL MEET OR EXCEED THE LATEST NFPA STANDARDS.

ONE (1)

**HARD SUCTION FLEXIBLE HOSE**

THERE SHALL BE TWO (2) MAXIFLEX 10' X 6" LENGTHS OF HARD SUCTION PROVIDED WITH THE VEHICLE. THE HARD SUCTION HOSE SHALL BE THE FLEXIBLE TYPE WITH LIGHTWEIGHT LONG HANDLE COUPLINGS.

ONE (1)

**HARD SUCTION RACKS**

TWO (2) HARD SUCTION RACKS SHALL BE PROVIDED AND CONSTRUCTED FROM ALUMINUM. EACH RACK SHALL HOLD ONE (1) 10' 6" DIAMETER SUCTION HOSE AND HAVE SPRING LATCHES TO HOLD HOSES IN POSITION.

TWELVE (12)

**KEY HIGH VOLUME HOSE**

THERE SHALL BE TWELVE (12) 100' SECTION OF 5" DIAMETER KEY HIGH VOLUME HOSE PROVIDED WITH THE APPARATUS.

ONE (1)

**MONITOR**

A TASK FORCE "CROSSFIRE" MODEL SAFE-TAK 1250 MODEL XFC-52 PORTABLE MONITOR SHALL BE PROVIDED WITH THE VEHICLE. THE MONITOR SHALL HAVE AN EXTRUDED ALUMINUM SHAPER TUBE, QUAD STACKED TIPS, AND TWO (2) 2.5" INLET GROUND MOUNTS AND M-RS1000- NL NOZZLE PROVIDED. A MOUNTING ADAPTER SHALL BE INCLUDED WITH THE MONITOR AND INSTALLED ON THE DISCHARGE FLANGE. THE STACKED TIPS SHALL HAVE A HARD ANODIZED FINISH AND SIZED 1-3/8", 1-1/2", 1-3/4" AND 2.0".

ONE (1)

**EQUIPMENT MOUNTING**

FERRARA SHALL INSTALL THE FOLLOWING CUSTOMER SUPPLIED EQUIPMENT:

ONE (1) MDT DOCKING STATION IN FRONT OF THE OFFICER'S SEATED POSITION COMPLETE WITH NECESSARY POWER FROM THE CHASSIS BATTERY SYSTEM.

ONE THERMAL IMAGE CAMERA MOUNT WITH NECESSARY 12 VOLT POWER, TO BE MOUNTED AT FINAL INSPECTION.

ONE (1)

**ONE-YEAR PARTS & LABOR WARRANTY**

THERE SHALL BE A ONE-(1) YEAR MECHANICAL PARTS AND LABOR WARRANTY PROVIDED WITH THE APPARATUS. THE APPARATUS SHALL BE FREE OF DEFECTS IN MATERIAL AND WORKMANSHIP FOR A WARRANTY PERIOD OF ONE-(1) YEAR AFTER THE DATE ON WHICH THE APPARATUS IS FIRST DELIVERED TO THE ORIGINAL PURCHASER.

ONE (1)

**TEN-YEAR BODY WARRANTY**

THERE SHALL BE A TEN-(10) YEAR BODY WARRANTY ON EACH NEW FIRE BODY/HEAVY-DUTY RESCUE APPARATUS. THE BODIES ARE TO BE FREE OF STRUCTURAL FAILURES CAUSED BY DEFECTIVE DESIGN OR WORKMANSHIP FOR A WARRANTY PERIOD OF TEN-(10) YEARS AFTER THE DATE ON WHICH THE VEHICLE IS FIRST DELIVERED TO THE ORIGINAL PURCHASER OR 100,000 MILES, WHICH EVER OCCURS FIRST.

ONE (1)

**FOUR-YEAR PAINT/CORROSION WARRANTY**

THERE SHALL BE A FOUR-(4) YEAR PAINT/CORROSION WARRANTY PROVIDED. THIS WARRANTY SHALL COVER PERFORATION, BLISTERING, PEELING, OR ANY OTHER ADHESION DEFECTS CAUSED BY DEFECTIVE MANUFACTURING METHODS, OR MATERIAL SELECTIONS, FOR A WARRANTY PERIOD OF FOUR-(4) YEARS OR 100,000 MILES WHICH OCCURS FIRST, AFTER THE DATE OF WHICH THE VEHICLE IS FIRST DELIVERED TO THE ORIGINAL PURCHASER.

ONE (1)

**TRANSPORTATION**

TO INSURE PROPER BREAK-IN OF ALL COMPONENTS WHILE STILL UNDER WARRANTY, THE APPARATUS SHALL BE DELIVERED OVER THE ROAD UNDER ITS OWN POWER. (RAIL AND/OR TRUCK FREIGHT SHALL NOT BE ACCEPTABLE)

ONE (1)

**FINAL INSPECTION TRIP**

THERE WILL BE A FINAL INSPECTION TRIP FOR THREE (3) REPRESENTATIVES OF THE BUYING AUTHORITY AT THE FACILITY WHERE THE APPARATUS IS BEING CONSTRUCTED. THE INSPECTION TRIP(S) WILL BE COMPLETED PRIOR TO DELIVERY OF THE APPARATUS. FACTORY AND SALES REPRESENTATIVES WILL BE AVAILABLE AT THE TIME OF INSPECTION. TRANSPORTATION, LODGING AND MEALS, WILL BE THE RESPONSIBILITY OF THE SUCCESSFUL BIDDER.

**NO FURTHER INFORMATION BELOW THIS POINT.**

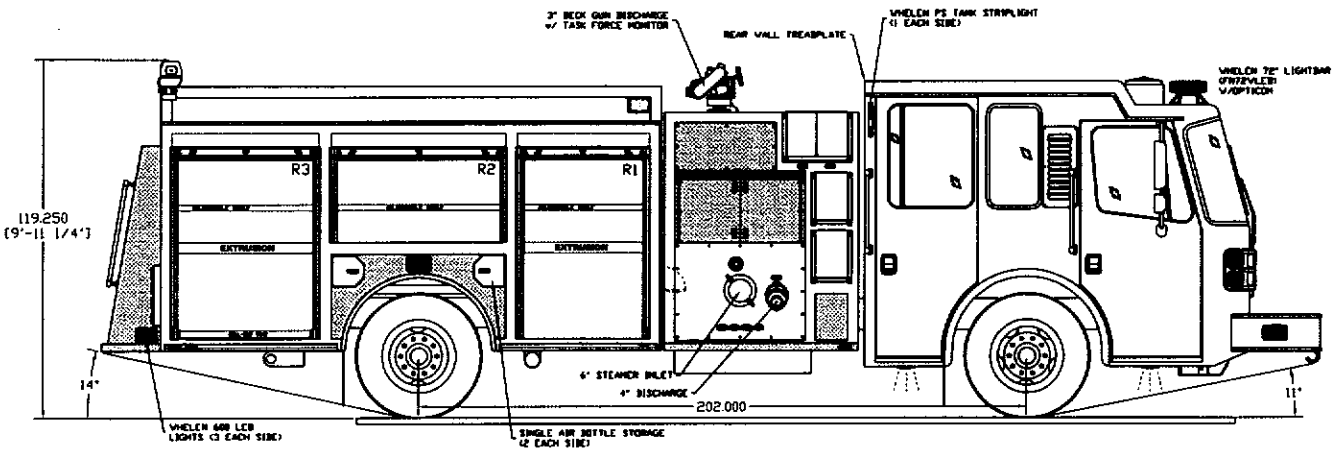


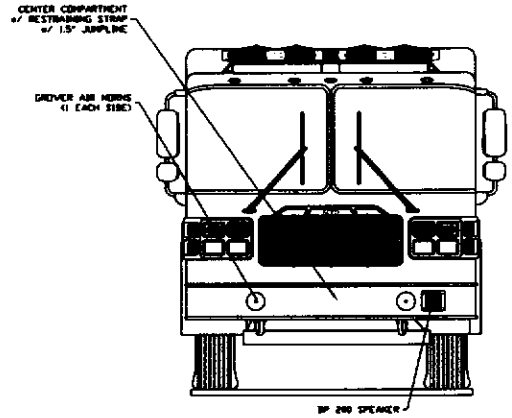


| COMPARTMENT DIMENSIONS | | |
|---|---|---|
| COMPT. | OPENING | INTERIOR |
| L1/R1 | 41W X 59H | 44W X 72H X [illegible] |
| L2/R2 | 55W X 27H | 58W X 40H X 150 |
| L3/R3 | 46W X 59H | 49W X 72H X [illegible] |
| B1 | 43W X 49.75H | 46W X 58.50H X [illegible] |

IT IS UNLAWFUL TO COPY OR REPRODUCE ANY OR ALL OF THIS DRAWING WITHOUT THE WRITTEN PERMISSION OF FERRARA FIRE APPARATUS. ANY UNAUTHORIZED REPRODUCTION WILL RESULT IN PROSECUTION TO THE FULLEST EXTENT OF THE LAW. DIMENSIONS AND ITEM LOCATIONS ARE APPROXIMATE AND ARE SUBJECT TO REVISIONS THAT MAY OCCUR AS IS NECESSARY DURING CONSTRUCTION. THESE DETAILS MAY NOT BE SHOWN.

| HOSEBED CAPACITY |
|---|
| 1200' OF 5" |
| 800' OF 2.5" |

| LADDER STORAGE COMPLIMENT |
|---|
| 1-24' 2-SECTION LADDER PBL-24 |
| 1-14' ROOF LADDER PRL-14 |
| 1-10' ATTIC LADDER FL-10 |
| 2-PIKE POLE TUBES |

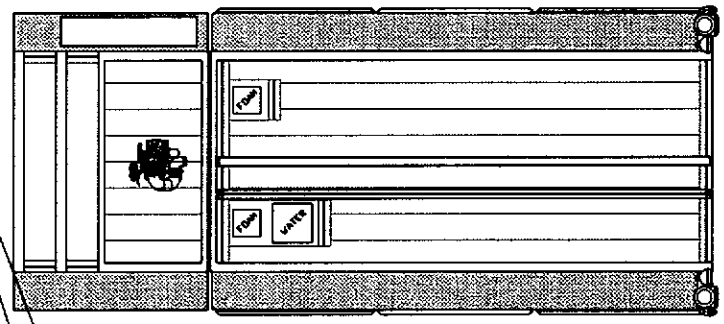


FERRARA
FERRARA FIRE APPARATUS, INCORPORATED
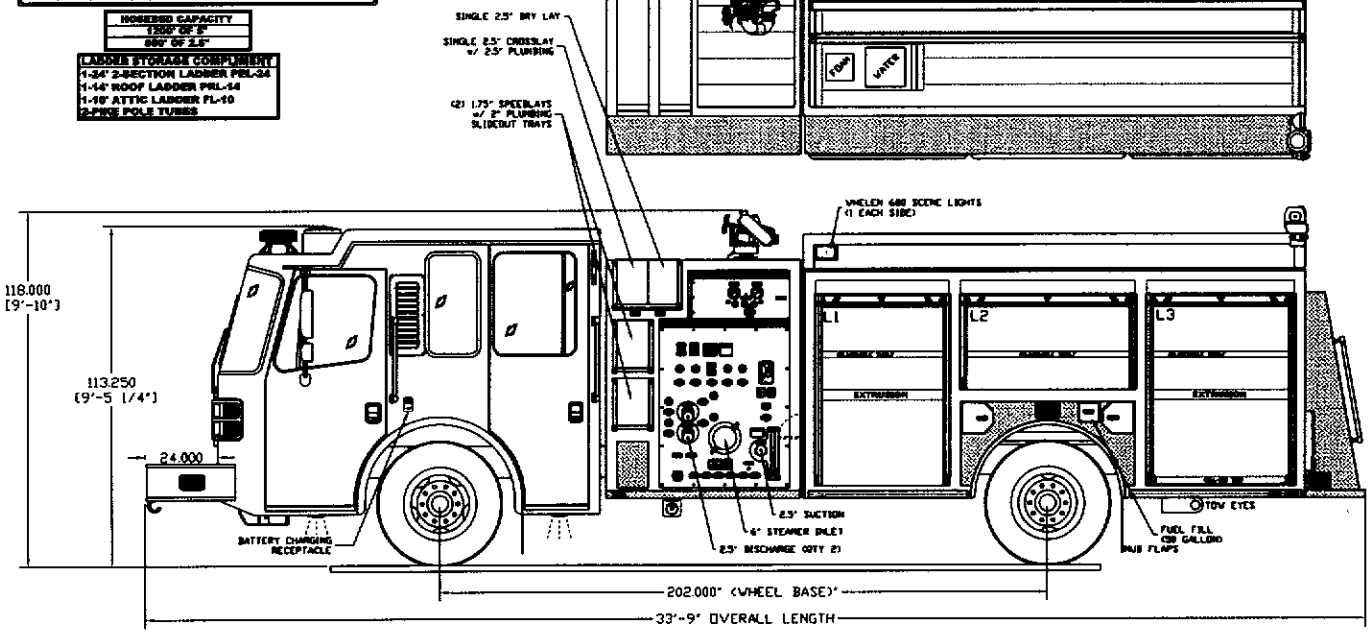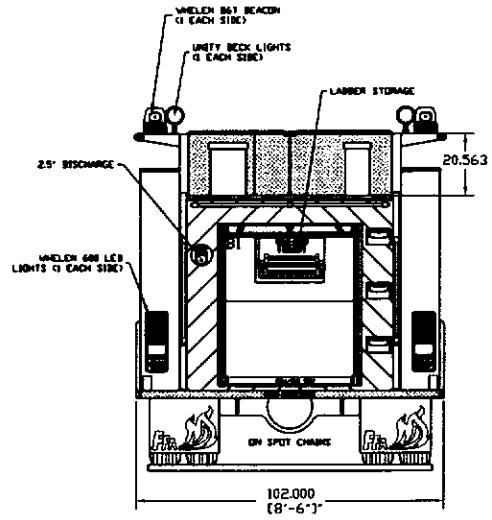
**SHELBY COUNTY FD**
**1500 GPM WATEROUS MIDSHIP PUMP**
**750 GALLON WATER TANK**
**(2) 20 GALLON FOAM TANK**